The comparator is used to compare between a reference value and another input value. Such as Temperature sensor output voltage and a setpoint. Then the output of the comparator can activate a control circuit such as air-condition circuit.
This Worksheet provides evidence for PC1.5.

PC1.3	Build an **inverting** op-amp circuit using 741 IC, and measure the output voltage using the multimeter or oscilloscope for different input voltages. Find the circuit gain and compare the measured and calculated theoretical values.

Q1) Use MultiSim.com to simulate the Comparator circuit shown then perform steps

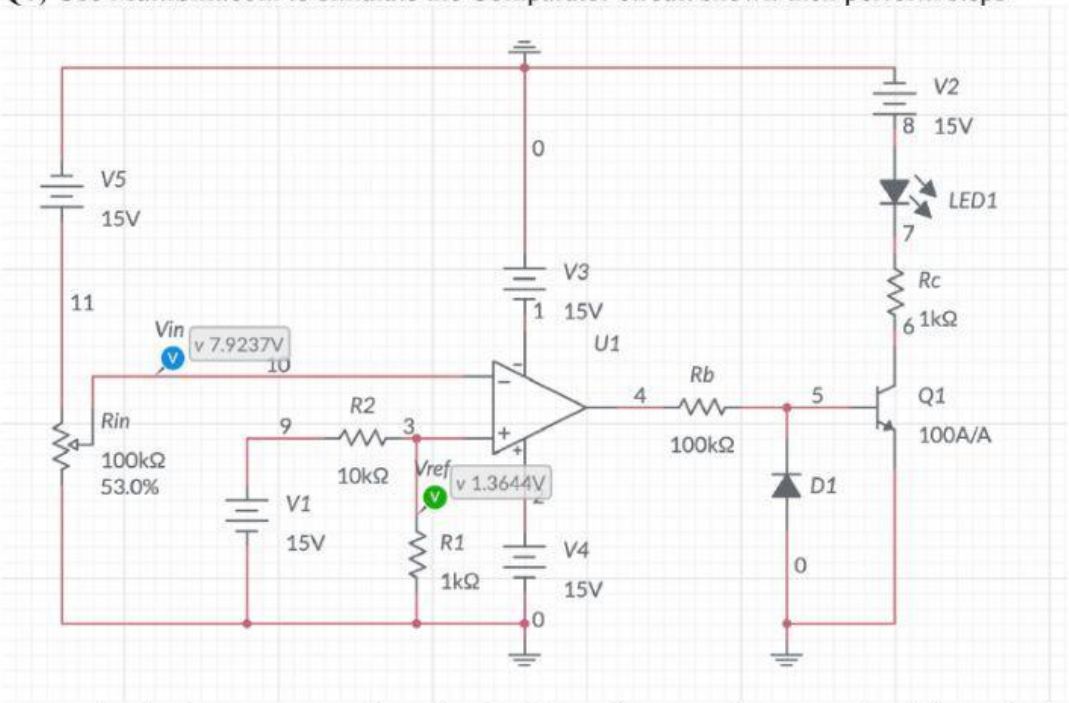

A. Apply power to the circuit. Depending on the current setting of the potentiometer, the LED may or may not be lit when you connect the power. If the LED is ON, adjust the potentiometer past the point at which the LED is OFF.

B. Use voltage probe to measure the voltage at the op-amp's inverting terminal (pin 2), which is the reference voltage **(V_{REF})** of the comparator and record the value in the Table below. In addition, calculate **V_{REF}** when R1 = 1kΩ and record the value in the table below.(nearest Tenth value)

R1	Measured V_{REF}	Calculated V_{REF}	% Error	Measured V_{in} (Once LED is ON in step C)
1 kΩ				
10 kΩ				
47 kΩ				

C. Vary the potentiometer until the LED is ON. For R1 = 1KΩ then record **Measured Vin** in the table.

D. Repeat steps B and C for the other values of R1 in the table above.

E. What do you observe?

LIVEWORKSHEETS

Formulas:

- Voltage divider rule

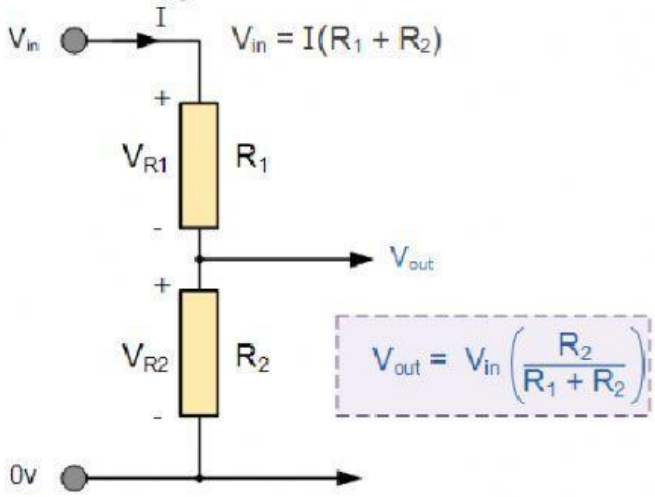

- % error formula

$$\% \text{ Error} = \left| \frac{\text{Theoretical Value} - \text{Experimental Value}}{\text{Theoretical Value}} \right| \times 100$$

Theoretical Value = Actual ... Known ...True Value

Theoretical value is also the calculated value.

LIVEWORKSHEETS