Se forma la voz PASIVA con el verbo auxiliar "**to be**" y el participio pasado del verbo.

Es decir: Sujeto + verbo auxiliar (to be) + participio pasado (última columna de las listas de los verbos irregulares y regulares)

El verbo "to be" lo puedo usar en presente (is/are) o en pasado (was/were), de acuerdo al tiempo que esté necesitando en la oración.

Ejemplo:

Voz activa: *Graham Bell invented the telephone. (Past simple tense)*

Voz pasiva: *The telephone WAS invented by Bell.*

PASSIVE FOR PROCESS (VOZ PASIVA PARA PROCESOS)

En esta clase utilizaremos la Voz Pasiva para describir cómo se hacen, se usan o se fabrican las cosas en determinados procesos o procedimientos.

Activity 1: (Passive voice in past tense)

Read the text and find examples of Passive voice forms. Example: "was made"

How was paper made for the first time?

The first paper known to history was made in around 3500 BC by the ancient Egyptians. Strips from the papyrus reeds were dampened, made into a criss-cross pattern and pressed into sheets. Our word "paper" comes from "papyrus".

However, paper closer to our modern type was invented in China in about AD 105 by a scholar called Tsai Lun. Legend tells that, one day he was watching a wasp making its nest, when he noticed that tiny pieces of bamboo were chewed up by the wasp´s saliva. Small balls were formed and then, they were pressed into flat sheets with the wasp´s feet. After that, these flat sheets were used to build a wall in the wasp´s nest. Tsai Lun copied the wasp. A paste of bamboo and water was prepared and a flat sheet was dried in the sun. The first paper was created.

Activity 2: Passive voice in Present tense

LIVEWORKSHEETS

Read the text and complete using Passive Voice (verb to be in the present + Past participle form of verb

True or False? Justify the false ones.

How paper is made.

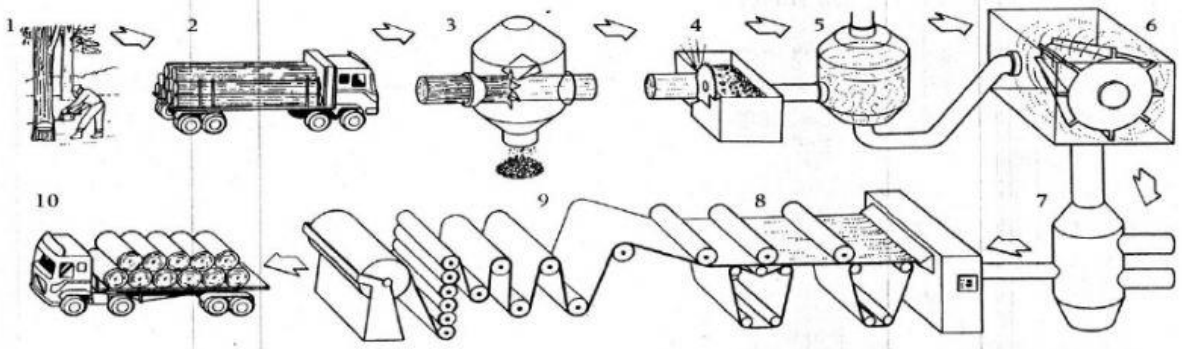

1 Trees ...are cut down... (cut down).
2 They ..... (take) to the paper mill.
3 The bark ..... (remove).
4 The wood ..... (break) into small chips.
5 The chips ..... (mix) with water.
6 The mixture ..... (make) into a pulp.
7 Chemicals and dyes ..... (add) to the mixture.
8 The pulp ..... (press) by rollers to remove the water.
9 The paper ..... (dry) by hot rollers.
10 The rolls of paper ..... (send) to factories, newspaper offices, etc.

a- Trees are cut down and taken to the paper mill. .....
b- The wood is removed and the bark is broken in chips. .....
c- Chemical and dyes are added to the pulp .....
d- The paper is dried in the sun .....
e- Factories receive the rolls of paper .....

Activity 3: **Build these passive sentences (present tense)**

Example: English/speak/ all over the world ------- *English is spoken all over the world*

1- Toyota cars / produce / in Japan
2- Toys /make/ in Taiwan
3- Greek / speak / in Greece
4- Hanukkah /celebrate/ in November
5- Raw fish/eat/ in Japan
6- Million of whatsapps /send/ every day
7- Tea / usually drink/ in Britain
8- Sometimes the past / forget
9- Cars /drive/ on the left in London
10- Blue uniform /wear/ at EEST N°2

LIVEWORKSHEETS