Name : _____

Volume - Rectangular Prism

Sheet 1

Find the volume of each L - block.

1)

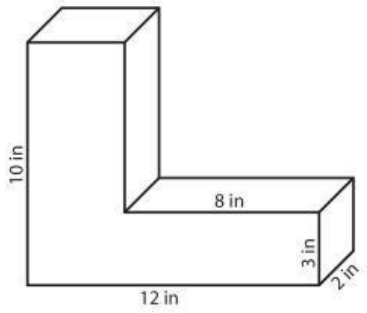

Volume = _____

2)

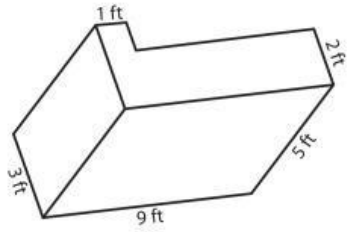

Volume = _____

3)

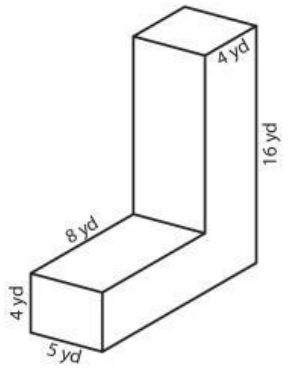

Volume = _____

4)

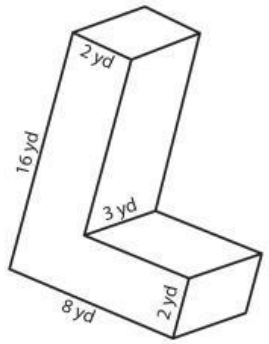

Volume = _____

5)

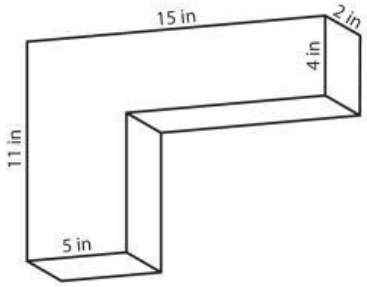

Volume = _____

6)

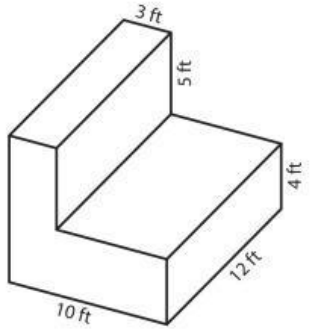

Volume = _____

7)

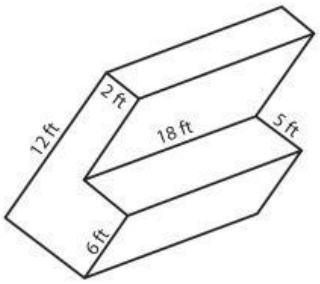

Volume = _____

8)

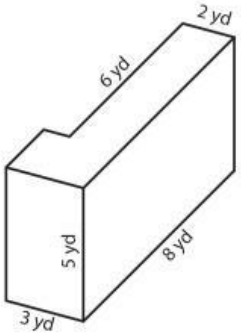

Volume = _____

9)

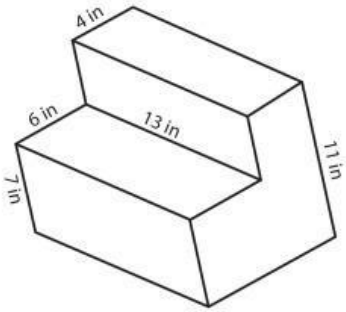

Volume = _____

LIVEWORKSHEETS