Pedigree Practice

Inheritance (Unit 4) – Biology

Name: _____

Block: _____ Date: _____

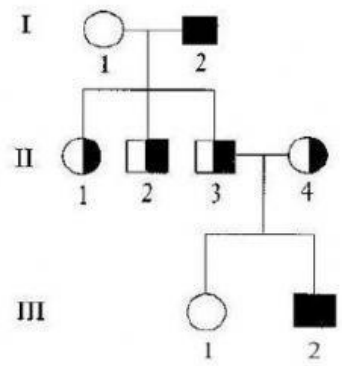

Write the genotype for every individual shown in this pedigree.

1. I-1: ___
2. I-2: ___
3. II-1: ___
4. II-2: ___
5. II-3: ___
6. II-4: ___
7. III-1: ___
8. III-2: ___

9. Which individual are carriers of the trait being tracked? _____
10. Is the trait dominant or recessive? _____

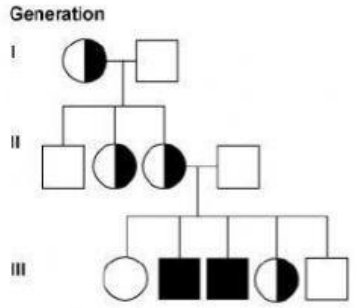

11. Is the trait being track here autosomal or sex-linked? _____
12. If it's sex-linked, is it X-linked or Y-linked, and how can you tell? (If it's not, just write "It's not"): _____

_____

13. How can you tell if it's autosomal or sex-linked? _____

_____

14. Will III-2 be able to pass this trait on to a daughter? Why or why not? _____

_____

15. Will III-2 be able to pass this trait on to a son? Why or why not? _____

_____

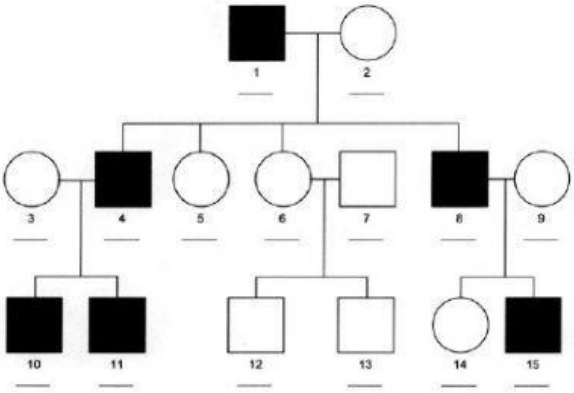

16. Is the trait being track here autosomal or sex-linked?

_____

17. If it's sex-linked, is it X-linked or Y-linked, and how can you tell? (If it's not, just write "It's not"):

_____

_____

18. Will Individual 12 be able to pass this trait on to a daughter? Why or why not? _____

_____

19. Will Individual 12 be able to pass this trait on to a son? Why or why not? _____

_____

LIVEWORKSHEETS