**NEU/ IELTS FOUNDATION 2/ FINAL TEST/ LISTENING**

**SECTION 1:**

**QUESTIONS 1-4**

**You will hear two students talking about university clubs and societies. Complete the table. Write NO MORE THAN TWO WORDS OR A NUMBER.**

| Club | Membership fee | Number of members |
|---|---|---|
| (1) ..... | £20 | 60 |
| cross country cycling | £15 | (2) ..... |
| film and drama | £50 | (3) ..... |
| (4) ..... | £5 | 80 |

**QUESTIONS 5-7**

**Listen to the next part of the recording and answer the questions. Write NO MORE THAN THREE WORDS.**

a. contemporary dance
b. yoga
c. film and drama
d. cycling
e. photography
f. running
g. jazz and tap dancing

**5** .....

**6** .....

**7** .....



LIVEWORKSHEETS

**QUESTIONS 8-10**

**Listen to the last part of the recording and complete the form. Write no more than TWO words or a number.**

Name: **(8)** Victoria .....

Age: 19

Address: **(9)** 57, ....., Atherton Park, Manchester, M46

Contact number: **(10)** .....

Email: victoriainatherton@england.com

**SECTION 2:**

**QUESTIONS 11-14**

**You will hear a recording of a lecture on deep sea exploration. Listen to the first part of the lecture and complete the time line using NO MORE THAN TWO WORDS AND/ OR NUMBERS FROM THE RECORDING.**

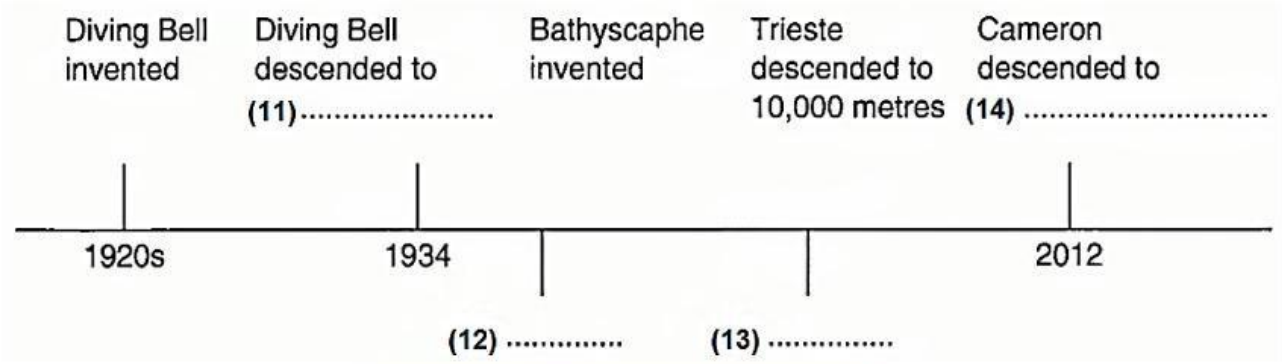


**QUESTIONS 15-18**

**Now you will hear the next part of the lecture. Label the diagram of the Deep Sea Challenger. WRITE NO MORE THAN THREE WORDS.**



LIVEWORKSHEETS

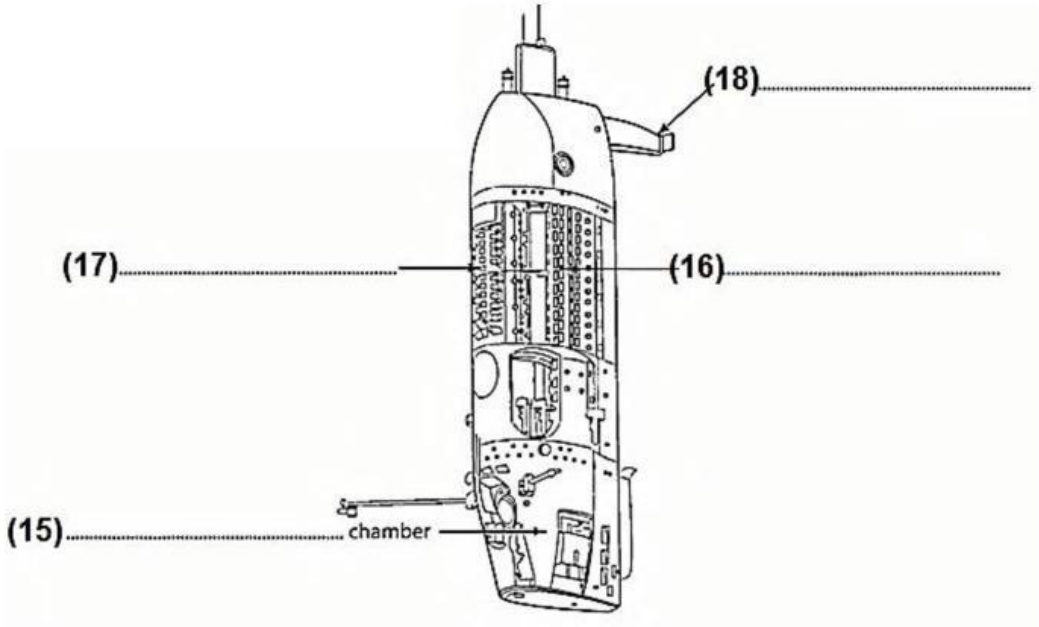


**QUESTIONS 19-20**

**Now listen to the final part of the lecture and complete the notes. WRITE NO THAN THREE WORDS OR A NUMBER.**

**Justifications for deep sea research:**

a. Scientists understand more about the **(19)** .....
   - helps to predict earthquakes

b. increased knowledge of availability of **(20)** .....
   - commercial benefits



LIVEWORKSHEETS

**SECTION 3:**

**QUESTIONS 21-25**

**You will hear a human resources manager talking about her company's work-life balance policy. Complete the sentences. Write NO MORE THAN TWO WORDS OR A NUMBER.**

**21** The company is concerned about the physical ..... health of the workers.

**22** It aims to give employees a chance to create a balance between their work and ..... lives.

**23** Some parents need to work ..... hours so they can look after their children.

**24** A lot of parents work part time and others work .....

**25** Women who have had a baby can take ..... off work before they come back to the office.

**QUESTIONS 26-28**

**Listen to the next part of the recording and label the pie chart. Write NO MORE THAN THREE WORDS OR A NUMBER.**

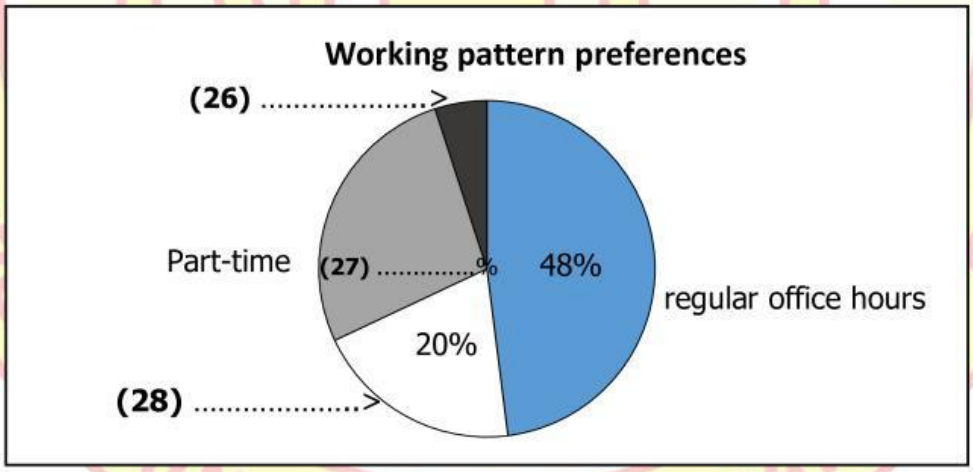


Sally has **(29)** ..... She leaves them at nursery before 8.00 a.m.

Collects them from **(30)** ..... house in the afternoon. Finishes her work at home.

***Good luck!***



LIVEWORKSHEETS