Unit 5 Unit test

1 Circle the correct word. /3

1 mik / apple

2 meat / yogurt

3 ice cream / carrots

4 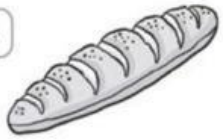 bread / cookie

2 Complete the words. /5

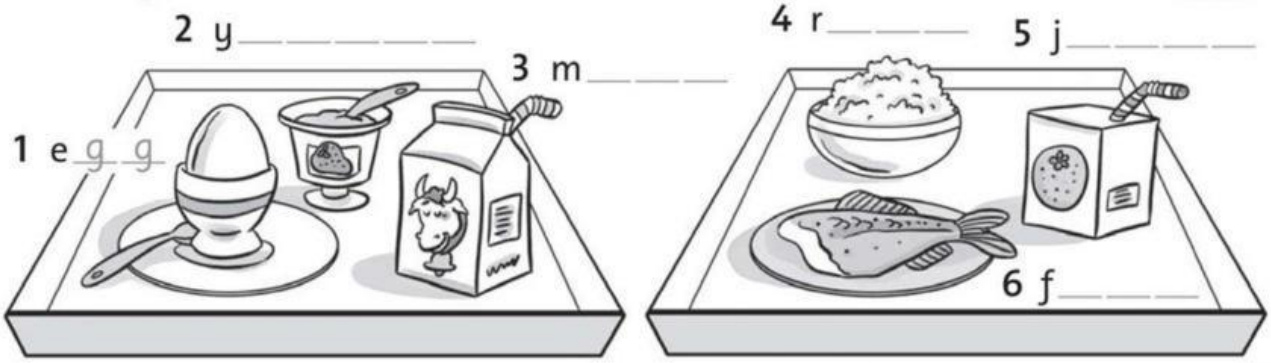

3 Write the words in the correct order. /4

1 I like don't rice. I don't like rice.

2 Do milk? you like _____

3 you Do carrots? like _____

4 like yogurt. I _____

5 don't I ice cream. like _____

4 Complete the sentences. /3

1 Do you like bread? Yes, I do.

2 _____ you like fish? No, I _____.

3 _____ you like tomatoes? No, I _____.

4 _____ you like carrots? Yes, I _____.

____ /15

© Oxford University Press
Permission granted to reproduce for instructional use.

LIVEWORKSHEETS