FIND THE VOLUME 1

Find the length, width and height of each of the rectangular prisms. Use the information to work out the volume. In all the examples, a cube represents a cubic cm.

<u>Volume of a rectangular prism</u>

To find the volume of a rectangular prism, we need to multiply the length by the width by the height.

Volume = length x width x height or l x w x h

The volume of a rectangular prism is the same as the number of cubes that fit inside it.

<u>Example</u>

Length is 3cm.

Width is 6cm.

Height is 2cm.

Volume is 6 x 3 x 2 = 36cm^3

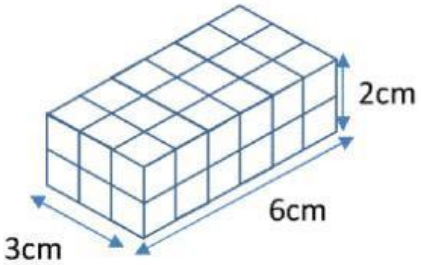

1)

Length: ___ cm Width: ___ cm Height: ___ cm

Volume: ___ x ___ x ___ = _____ cm^3

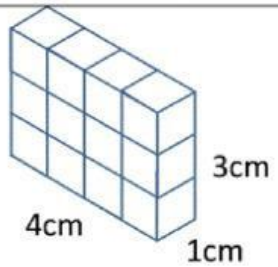

2)

Length: ___ cm Width: ___ cm Height: ___ cm

Volume: ___ x ___ x ___ = _____ cm^3

3)

Length: ___ cm Width: ___ cm Height: ___ cm

Volume: ___ x ___ x ___ = _____ cm^3

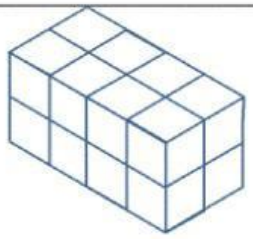

LIVEWORKSHEETS

FIND THE VOLUME 2 (METRIC)

Find the volume of these rectangular prisms. They are not to scale!

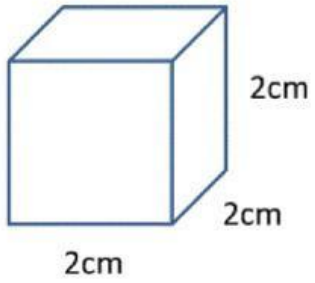	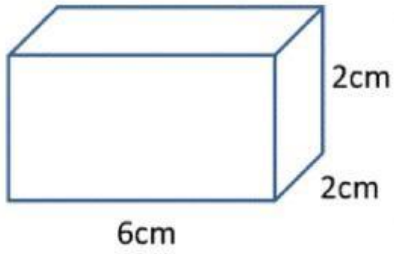	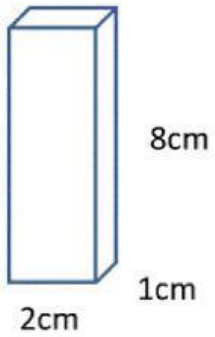
Volume = _____	Volume = _____	Volume = _____

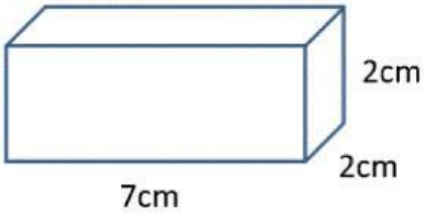	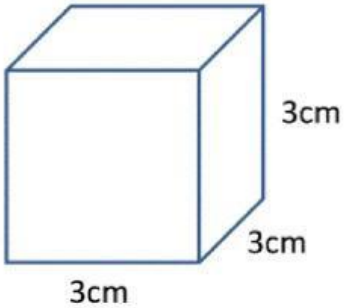	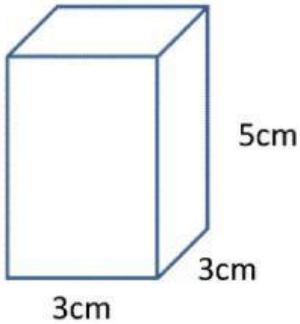
Volume = _____	Volume = _____	Volume = _____

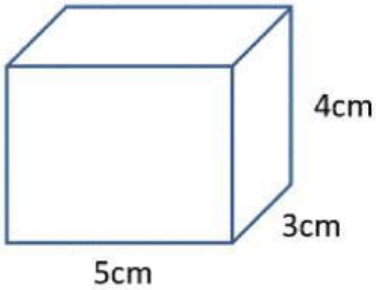	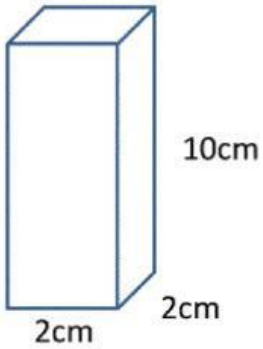	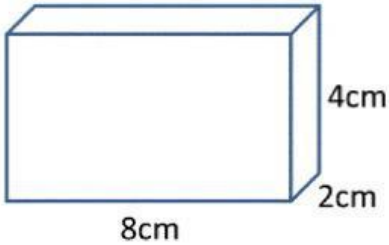
Volume = _____	Volume = _____	Volume = _____

LIVEWORKSHEETS

FIND THE VOLUME 3 (METRIC)

Find the volume of these rectangular prisms. They are not to scale!

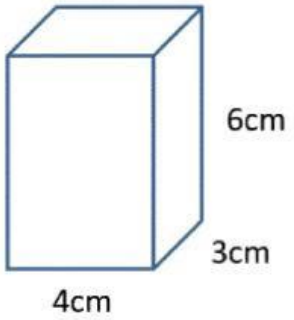	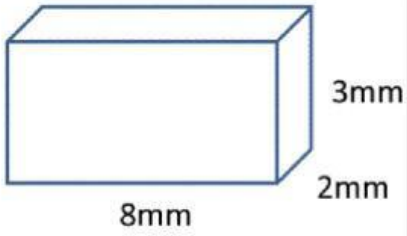	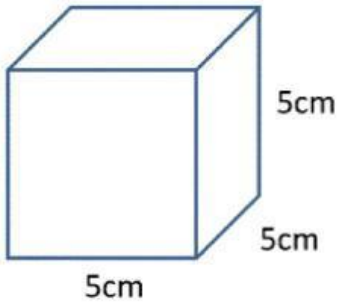
Volume = _____	Volume = _____	Volume = _____

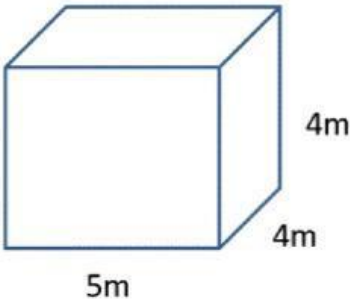	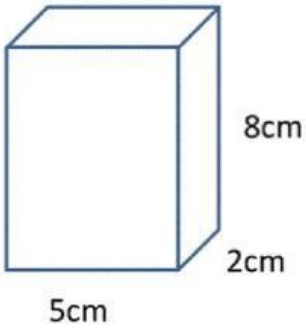	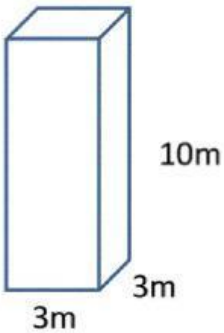
Volume = _____	Volume = _____	Volume = _____

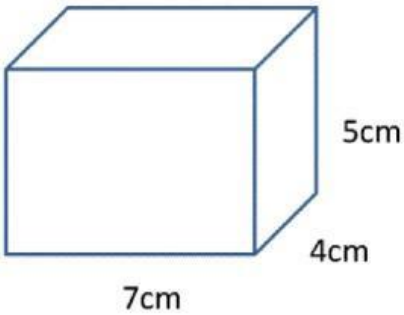	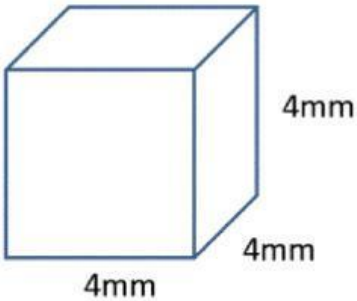	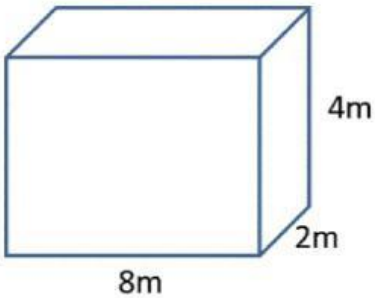
Volume = _____	Volume = _____	Volume = _____

LIVEWORKSHEETS