Cause and Effect Worksheet

Everything Pink

Overview: *Cause and effect* is one type of text structure. When a writer is using the *cause and effect* text structure, he or she is usually explaining reasons why something happened.

Directions: read each paragraph. A graphic organizer is used to show the structure of the text. Fill in the missing boxes with the appropriate info.

1. Some flamingos are pink. Not all flamingos are pink. The pink color comes from their diet. Flamingos that eat lots of shrimp will be pink. Flamingos that eat lots of algae will be pale or white.

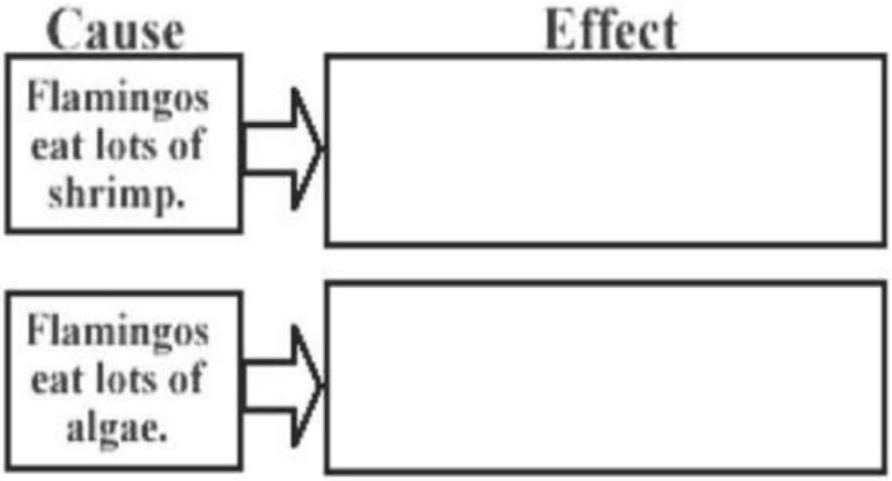

2. Cotton candy is made from sugar. Its natural color is white. The color is added. "Boo Blue" is used to make blue cotton candy. "Silly Nilly" is added to make pink cotton candy, which has a vanilla flavor.

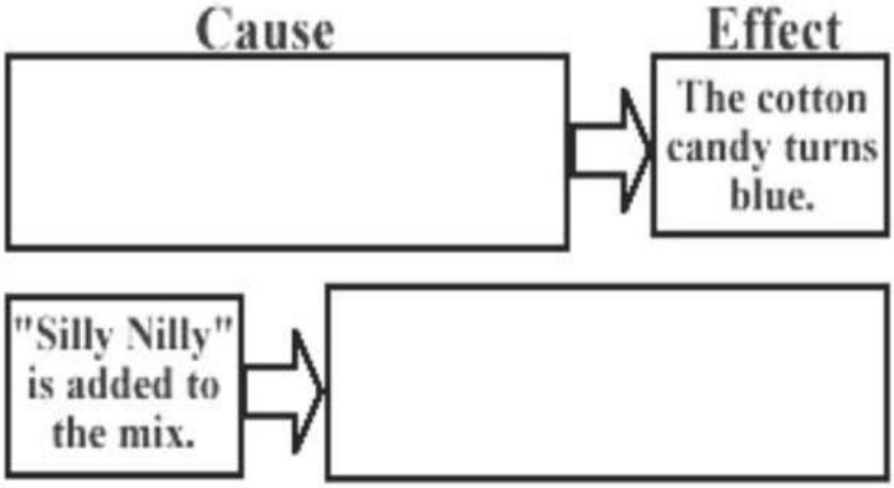

LIVEWORKSHEETS

3. Did you know that your tongue is a muscle? It is. And it's the only muscle you have that's covered in saliva and taste buds. Having taste buds stops you from eating rotten food. Having saliva protects you from some germs and bacteria. Gross, but helpful.

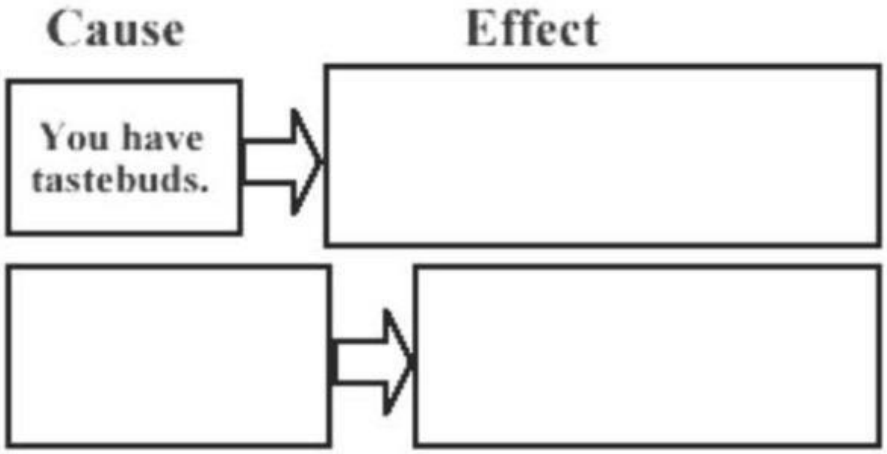

Text Structure 2

Directions: Read the passages and on a sheet of paper, **put the information from each passage into an appropriate graphic organizer**. The following graphic organizers are examples. Feel free to make changes if necessary. Each is used **at least once**.

1. The Age of the Dinosaurs

Dinosaurs existed about 250 million years ago to 65 million years ago. This era is broken up into three periods known as the Triassic, Jurassic and Cretaceous periods. The Triassic Period lasted for 35 million years from 250-205 million years ago. Planet Earth was a very different place back then. All the continents were united to form one huge land mass known as Pangaea. The Jurassic Period was the second phase. The continents began shifting apart. The time scale for this famous period is from 205 to 138 million years ago. The Cretaceous Period was the last period of the dinosaurs. It spanned a time from 138 million to about 65 million years ago. In this period the continents fully separated. However, Australia and Antarctica were still united.

LIVEWORKSHEETS

Chronological

Time Line

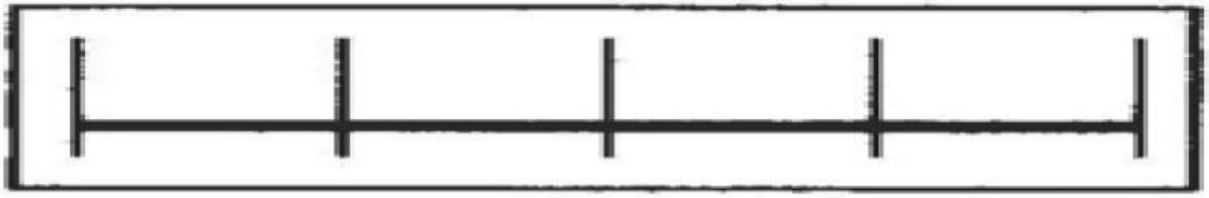

Sequence

Step by Step

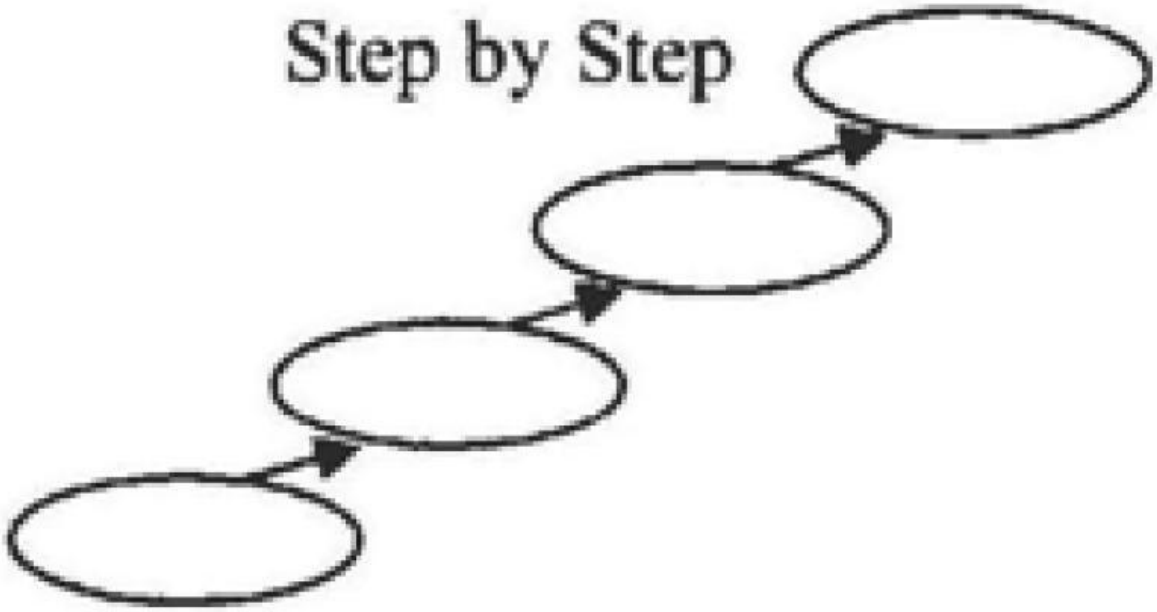

LIVEWORKSHEETS

Cause and Effect

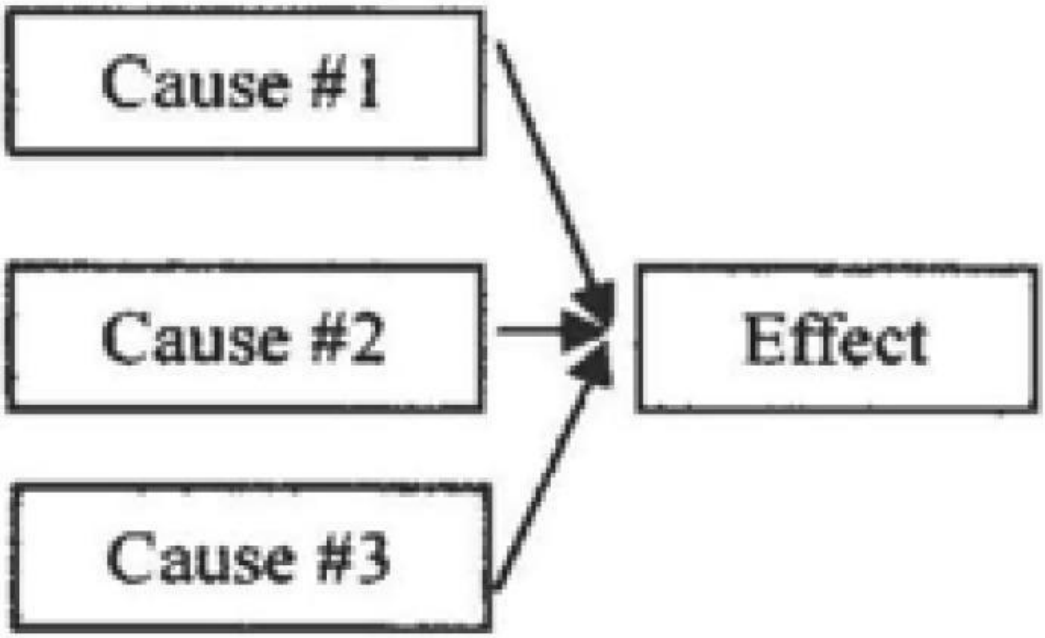

Problem and Solution

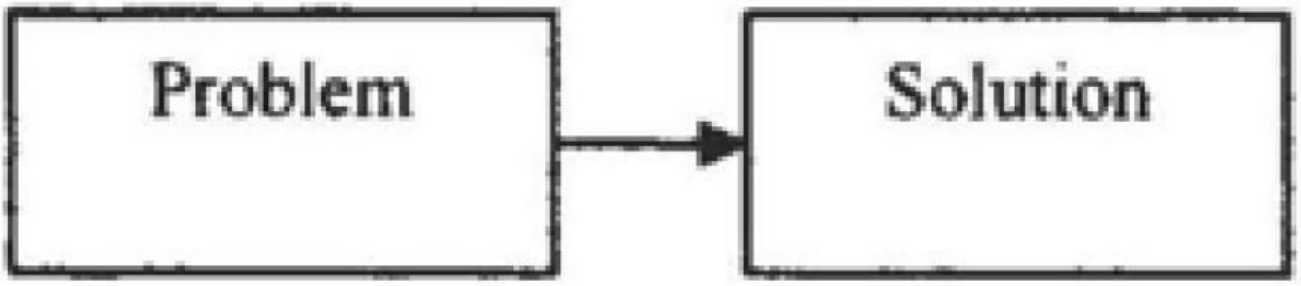

LIVEWORKSHEETS

Compare and Contrast

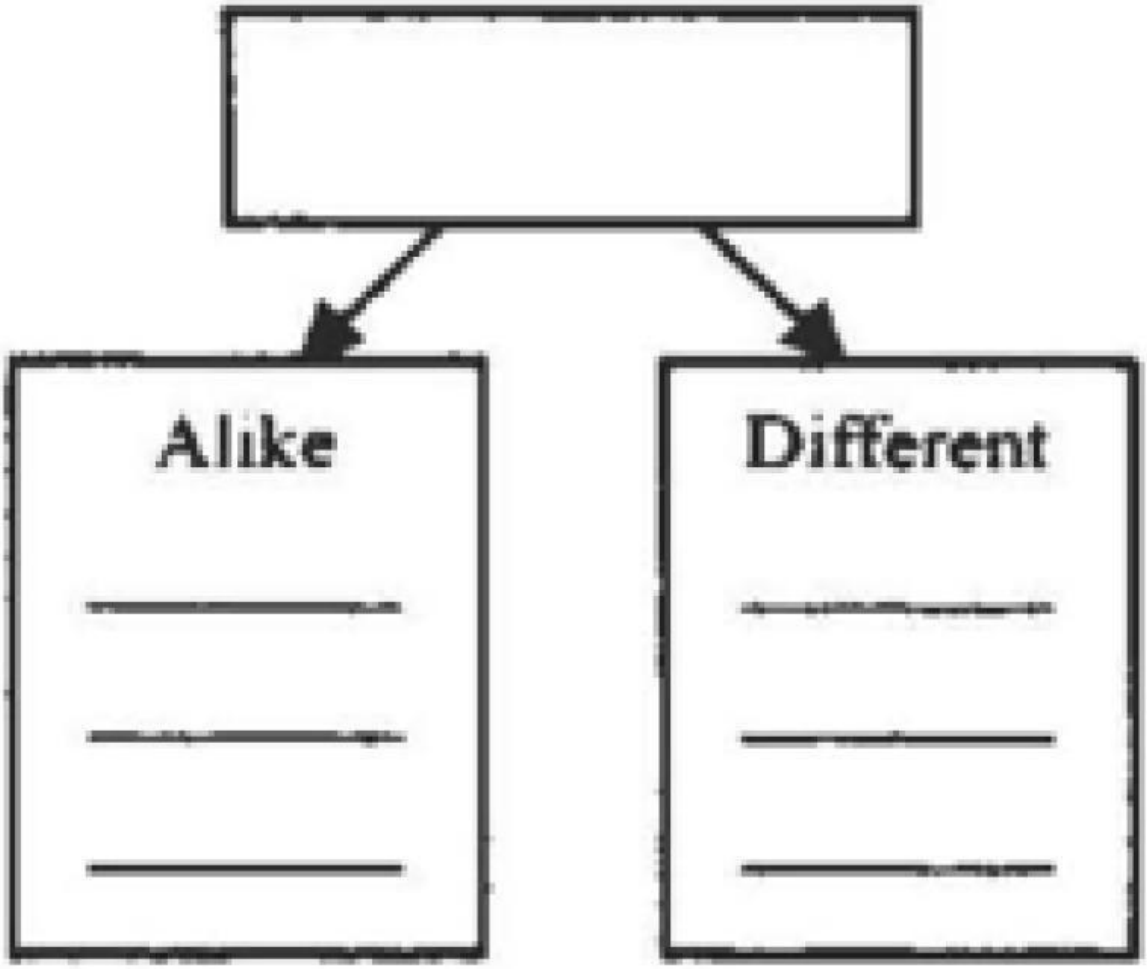

LIVEWORKSHEETS