Based on circuit below, find:

1. time constant
2. Voltage capacitor after switch closed at 150s
3. Current in circuit after switch closed at 150s
4. time taken to capacitor charged to 3V

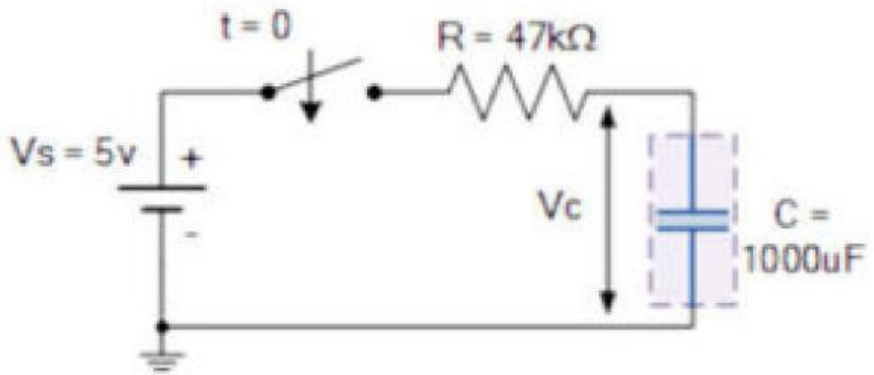

SOLUTION:

1. Time Constant (τ)

The time constant for an RC circuit is:

$$\tau = \square \times \square$$

Given:

- $R = 47\,k\Omega = 47000\,\Omega$
- $C = 1000\,\mu F = 1000 \times 10^{\square} F = 0.001\,F$

$$\tau = 47000 \times 0.001 = \square \text{ seconds}$$

LIVEWORKSHEETS

2. Voltage Across Capacitor at $t = 150\ s$

The voltage across a charging capacitor is:

$$V_C(t) = V_s\left(1 - e^{-\frac{t}{\tau}}\right)$$

Given:

- $V_s = \square V$
- $t = \square s$
- $\tau = \square s$

$$V_C(150) = \square\left(1 - e^{-\square}\right) \approx 5\left(1 - e^{-\square}\right)$$

$$e^{-3.19} \approx \square$$

$$V_C(150) \approx \square \times (1 - \square) = \square \times \square = \square V$$

3. Current in Circuit at $t = 150\ s$

The current in an RC charging circuit is:

$$I(t) = \frac{V_s}{R} \cdot e^{-\frac{t}{\tau}}$$

$$I(150) = \frac{\square}{\square} \cdot e^{-\square} \approx 0.\square A \cdot \square \approx \square \mu A$$

LIVEWORKSHEETS

4. Time Taken for Capacitor to Charge to 3V

We solve for t in:

$$V_C(t) = V_s\left(1 - e^{-\frac{t}{\tau}}\right)$$

$$\square = \square\left(1 - e^{\square}\right)$$

$$\frac{3}{\square} = 1 - e^{-\frac{t}{47}}$$

$$\Rightarrow e^{-\frac{t}{47}} = \square$$

Take natural log:

$$-\frac{t}{47} = \square(0.4)$$

$$\Rightarrow t = -47 \cdot \ln(0.4) \approx 47 \times \square = \square\, s$$

LIVEWORKSHEETS

✅ Summary:

Quantity	Value
Time Constant (τ)	____ s
Voltage at 150 s	≈ ____ V
Current at 150 s	≈ ____ μA
Time to reach 3 V	≈ ____ s

LIVEWORKSHEETS