LOOK AT THA LATHE MACHINE AND COMPLETE EACH PART OF IT.

SPINDLE | CROSS SLIDE | BED | TAIL STOCK | HEAD STOCK | FEED ROD

LEAD SCREW | FEED GEARING | COUMPOUND REST | CARRIAGE

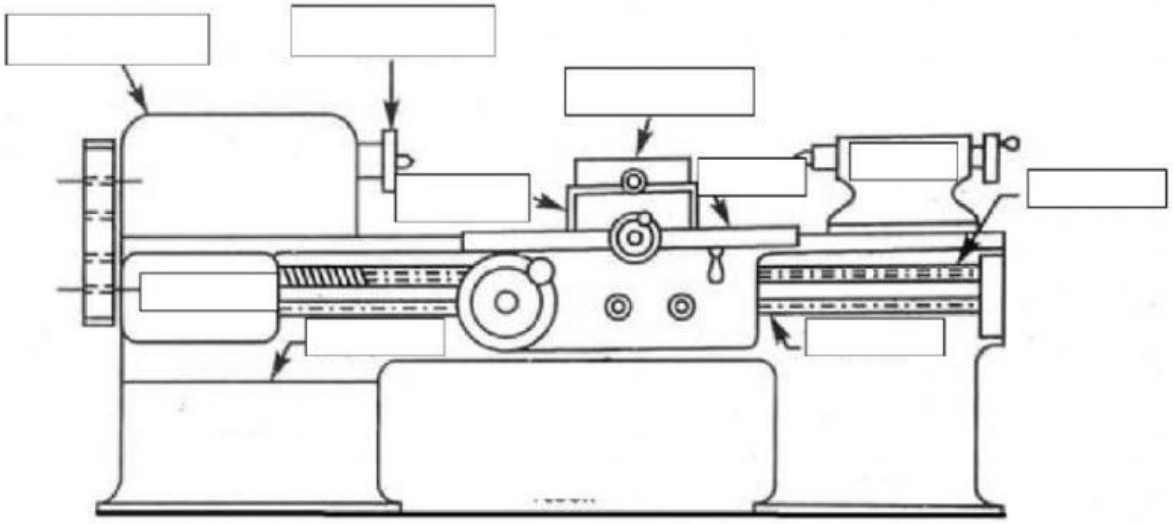

LIVEWORKSHEETS

LIVEWORKSHEETS