Electrolytic cells worksheet 2

Electrolysis

A chemical process in which electrical energy is converted to chemical energy

or the use or electrical energy to produce a chemical change

Electrolytic cells have very useful applications

- Electroplating
- Purifying metals (Cu in gr 11)
- Extraction of aluminium
- Preparation of chemicals, eg $Cl_2(g)$ $H_2(g)$ and NaOH (covered in matric)

Electroplating

-Electroplating is used to protect metals that oxidise very easily, by covering them with a thin layer of metal that does not oxidize easily eg chromium, silver and gold.

-The metal object that must be plated, acts as the cathode (negative electrode) and must always be connected to the **negative terminal** of the electrical supply.

-It is suspended into a bath that contains a solution of a suitable salt of **the metal with which it is supposed to be plated**. Eg Nickel mug must be electroplated with silver. The anode is made up of the piece of silver and cathode is the nickel mug.

With electroplating the same metal is oxidised and reduced! The positive silver ions in the solution is attracted to the negative cathode and reduced to form solid silver.

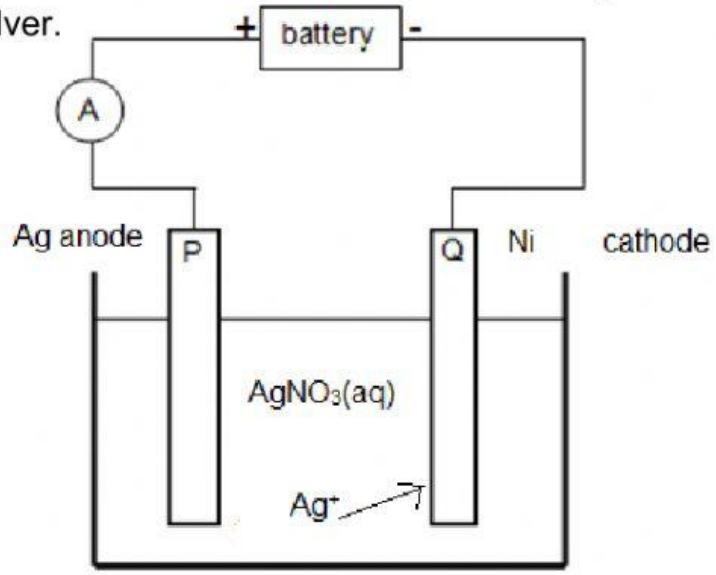

LIVEWORKSHEETS

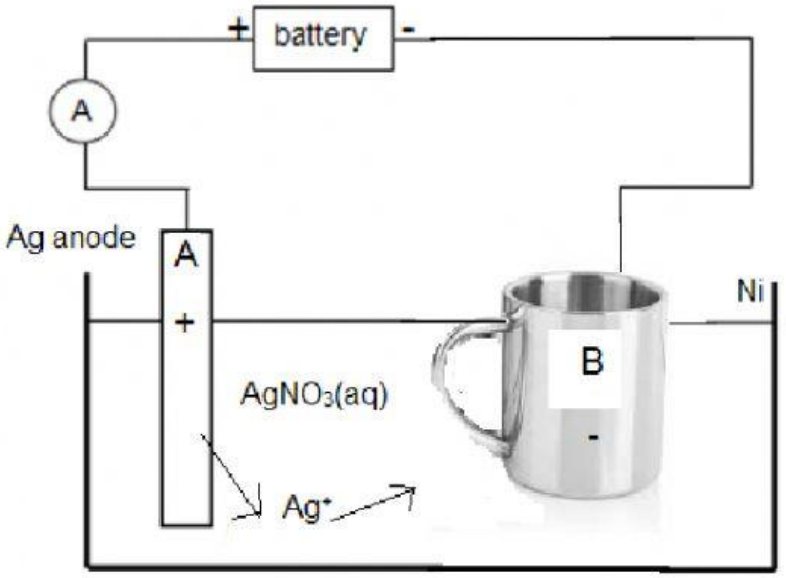

Once again electrode A will become positively charged (as it is connected to the + side of the battery)

And electrode B will become negatively charged (as it is connected to the - side of the battery)

You must always connect the object that you want to coat with another metal to the **negative side** of the battery. But why?

You will always be coating that object with a metal, and metal ions are always **positively charged** and will thus be attracted to the negatively charged object.

At the anode (always the positively charged electrode in electrolytic cells)

The silver/or whatever metal you want to use to plate an object with is connected

Oxi: $Ag(s) \rightarrow Ag^{+}(aq) + e^{-}$

At the cathode: (always the negatively charged electrode in electrolytic cells)

The object that you want to plate onto is connected

Red: $Ag^{+}(aq) + e^{-} \rightarrow Ag(s)$

***notice there is no reaction involving the Ni**

In the electrolyte solution needs to be the same metal as the one you are plating with, eg if you want to plate the Ni with Ag, then there should be an Ag solution in the electrolyte. ($NO3^{-}$ is always a safe option to use, eg AgNO3)

LIVEWORKSHEETS

So your standard reduction potential table is not very useful here, since the same reaction will always be written twice (just forward and reversed.)

Take note:

The electrolyte concentration always remains constant in electroplating since:

The rate at which Ag^+ is reduced at the cathode is equal to the rate at which Ag is oxidised at the anode, thus the concentration of the solution stays constant.

Thus as quickly as Ag anode breaks up and forms Ag^{+1} ions, the ions leave the solution, gain electrons and plate as Ag(s) onto the cathode.

Refining of Copper

Impure copper can be purified through electrolysis

The impure copper will make up the anode of the cell and the pure copper acts as the cathode.

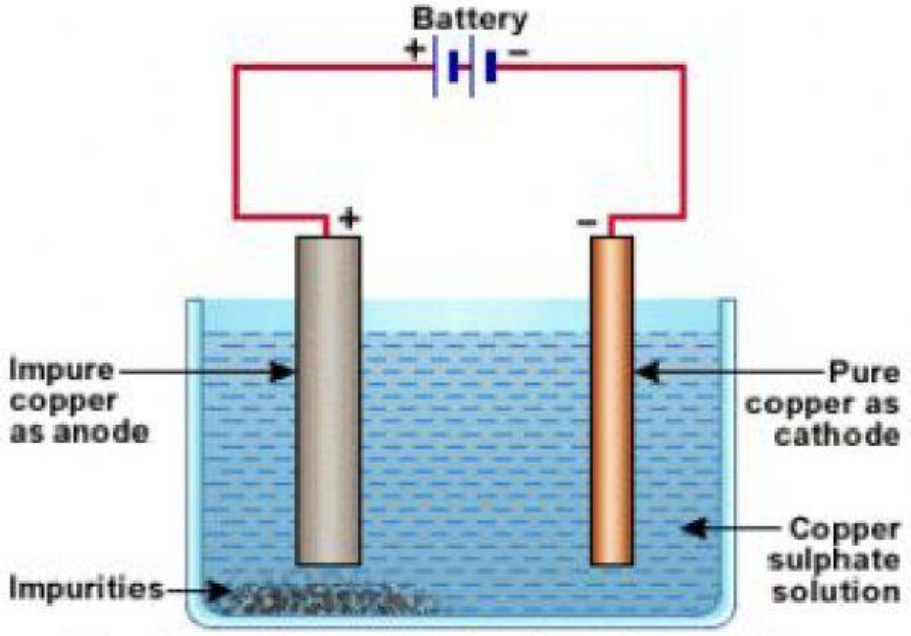

Experimental set up for the electrolytic refining of copper.

LIVEWORKSHEETS

This cell is actually very similar to electroplating.

Notice that you have an impure stick of copper. (This is usually made up of a mixutre of Cu, Ag, Au, Pt etc.)

Now your mission is to try to

- get the Cu out of that stick and
- then to plate the Cu^{+2}onto the pure stick of Cu

This pure stick can then be melted at the end and used to make jewellery, Cu wires etc.

Notice again, than the object that you want to plate onto – is connected to the negative terminal of the battery. Because once again – the metal that you want to plate it with will always be positively charged ions.

Anode:

The copper atoms in the impure copper oxidise and become Cu^{+2} ions that move into the solution

$Cu(s) \rightarrow Cu^{+2}(aq) + 2e^-$

Cathode:

These Cu^{+2} ions then reduce at the cathode, becomes copper metal and plates onto the pure copper electrode.

$Cu^{+2}(aq) + 2e^- \rightarrow Cu(s)$

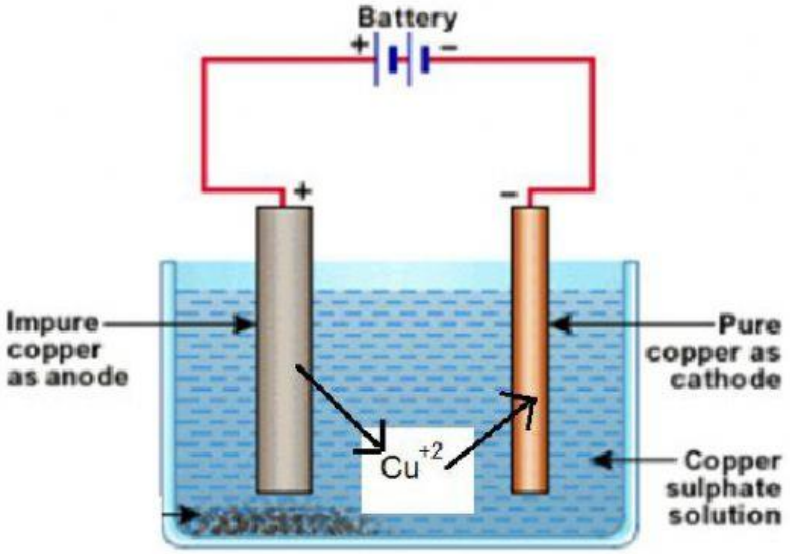

LIVEWORKSHEETS

Little pieces of the other impurities, such as Ag, Pt and Au break up as the anode starts to corrode and fall to the bottom of the beaker.

Once again the concentration of the electrolyte solution stays constant, because the rate at which Cu oxidises at the anode to become Cu^{+2} is equal to the rate at which the Cu^{+2} leaves the solution, and reduces at the cathode.

A common question asked in tests and exams is:

Why don't the other metals in the impure Copper (Ag, Pt or Au) oxidise at the anode and plate onto the pure Cu stick?

For this question – you will need to look at your standard reduction potential table

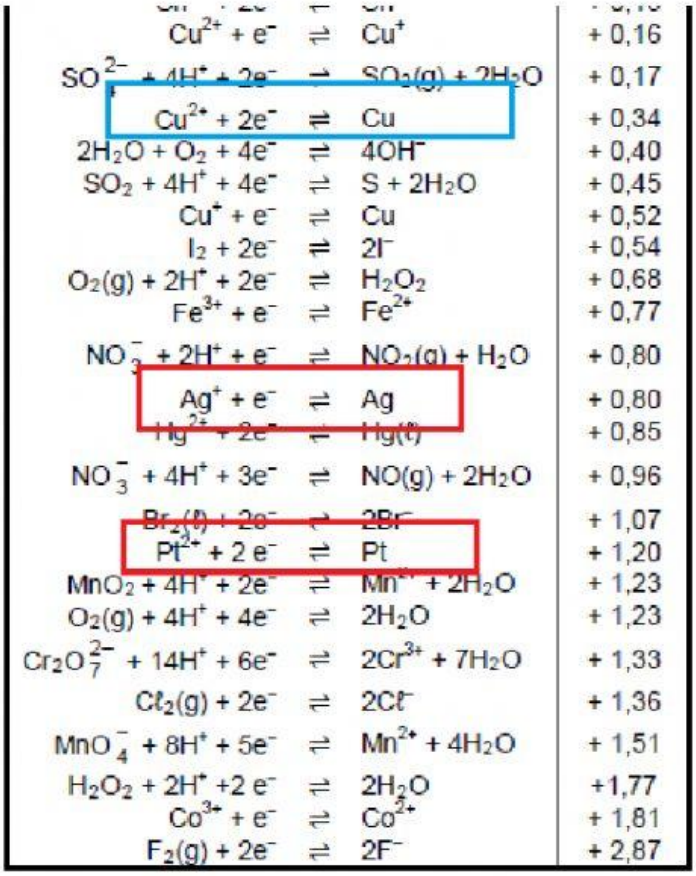

$Cu^{2+} + e^-$	⇌	Cu^+	+ 0,16
$SO_4^{2-} + 4H^+ + 2e^-$	⇌	$SO_2(g) + 2H_2O$	+ 0,17
$Cu^{2+} + 2e^-$	⇌	Cu	+ 0,34
$2H_2O + O_2 + 4e^-$	⇌	$4OH^-$	+ 0,40
$SO_2 + 4H^+ + 4e^-$	⇌	$S + 2H_2O$	+ 0,45
$Cu^+ + e^-$	⇌	Cu	+ 0,52
$I_2 + 2e^-$	⇌	$2I^-$	+ 0,54
$O_2(g) + 2H^+ + 2e^-$	⇌	H_2O_2	+ 0,68
$Fe^{3+} + e^-$	⇌	Fe^{2+}	+ 0,77
$NO_3^- + 2H^+ + e^-$	⇌	$NO_2(g) + H_2O$	+ 0,80
$Ag^+ + e^-$	⇌	Ag	+ 0,80
$Hg^{2+} + 2e^-$	⇌	$Hg(\ell)$	+ 0,85
$NO_3^- + 4H^+ + 3e^-$	⇌	$NO(g) + 2H_2O$	+ 0,96
$Br_2(\ell) + 2e^-$	⇌	$2Br^-$	+ 1,07
$Pt^{2+} + 2e^-$	⇌	Pt	+ 1,20
$MnO_2 + 4H^+ + 2e^-$	⇌	$Mn^{2+} + 2H_2O$	+ 1,23
$O_2(g) + 4H^+ + 4e^-$	⇌	$2H_2O$	+ 1,23
$Cr_2O_7^{2-} + 14H^+ + 6e^-$	⇌	$2Cr^{3+} + 7H_2O$	+ 1,33
$Cl_2(g) + 2e^-$	⇌	$2Cl^-$	+ 1,36
$MnO_4^- + 8H^+ + 5e^-$	⇌	$Mn^{2+} + 4H_2O$	+ 1,51
$H_2O_2 + 2H^+ + 2e^-$	⇌	$2H_2O$	+1,77
$Co^{3+} + e^-$	⇌	Co^{2+}	+ 1,81
$F_2(g) + 2e^-$	⇌	$2F^-$	+ 2,87

Notice that the Cu is higher up on the table than the other elements- thus when given a choice the elements higher on the table are always more likely to oxidise.

(Yes, this is true even in an electrolytic cell, where we use the opposite of the C-rule)

Thus Cu is a stronger reducing agent then all of these other elements.

LIVEWORKSHEETS

Quickly look at the similarities between electroplating and refining of Cu

Electroplating

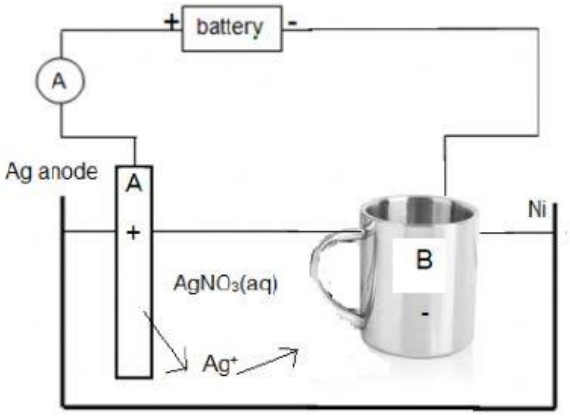

Refining of Cu

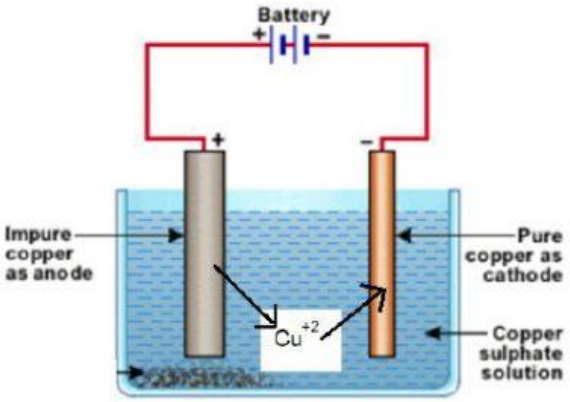

- The electrode that needs to be plated with the metal needs to be connected to the _____ side of the battery

- At the anode the Ag/Cu will always oxidise reduce and become ions.

- At the cathode the Ag^{+}/Cu^{+2} will always oxidise reduce and become neutral atoms, which plate onto the electrode.

- The concentration of the electrolyte increases decreases remains constant

LIVEWORKSHEETS

Exercise 1:

A Nickel artefact needs to be coated with chromium metal.

The simplified diagram below represents the arrangement that can be used to electroplate the nickel with chromium

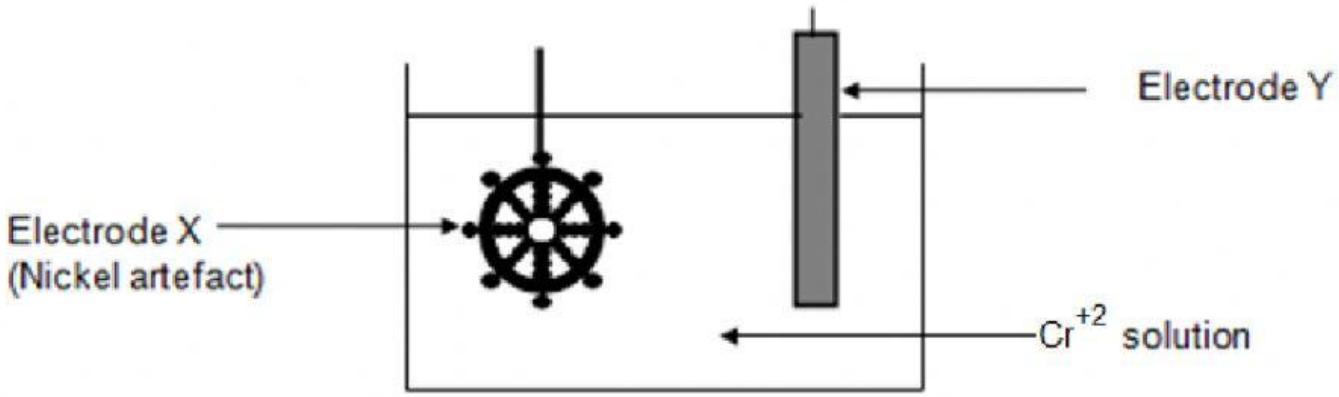

1.1 Write the name of the metal represented by electrode Y

1.2 Is electrode X connected to the positive or negative terminal of the battery:

1.3 Write the half reaction that occurs at electrode Y

→ +

1.4 Write the half reaction that occurs at electrode X

+ →

1.5 Electrode Y represents the anode cathode

1.6 Electrode X represents the anode cathode

1.7 The concentration of the electrolyte solution increases decreases remains constant

1.8 The above is true because the rate of which _____ oxidises at the Anode equals to the rate at which _____ reduces at the cathode.

LIVEWORKSHEETS

Exercise 2:

The diagram below represents a cell that can be used to electroplate a tin medal with a thin layer of platinum to improve its appearance.

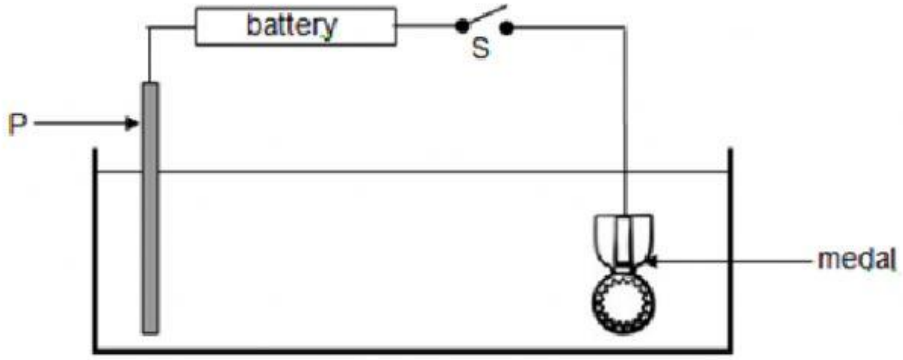

2.1 Write the name of the metal connected at electrode P:

2.2 Write the formula of a suitable solution to use as an electrolyte

2.2 Is the medal connected to the positive or negative terminal of the battery:

2.3 Write the half reaction that occurs at the medal

\+ →

2.4 Write the half reaction that occurs at electrode P

→ +

2.5 Electrode P represents the anode cathode

LIVEWORKSHEETS

Exercise 3:

Electrolysis is an important industrial process used to decompose compounds, extract metals from their ores and to purify metals like gold or copper.

The simplified diagram below represents an electrolytic cell used to purify copper.

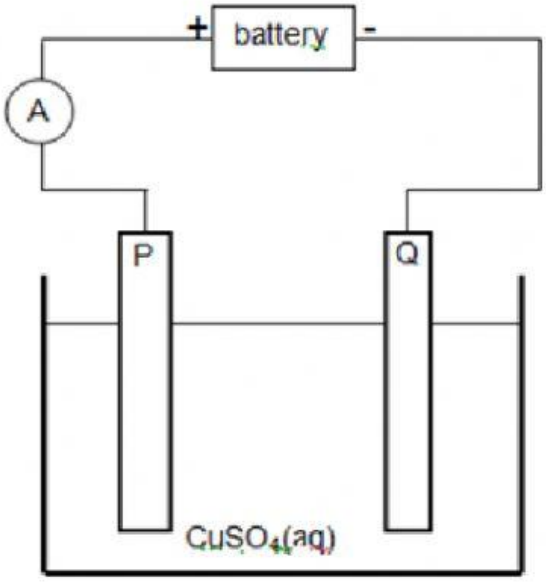

3.1 Which electrode represent the pure Cu electrode:

3.2 Write the half reaction that occurs at electrode P

→ +

3.3 Write the half reaction that occurs at electrode Q

+ →

3.4 Electrode P represents the anode cathode

LIVEWORKSHEETS