LIVEWORKSHEET - GRADE 3 – THE STRUCTURE OF THE EARTH

I. Complete this diagram of the internal structure of the Earth by labelling the four layers.

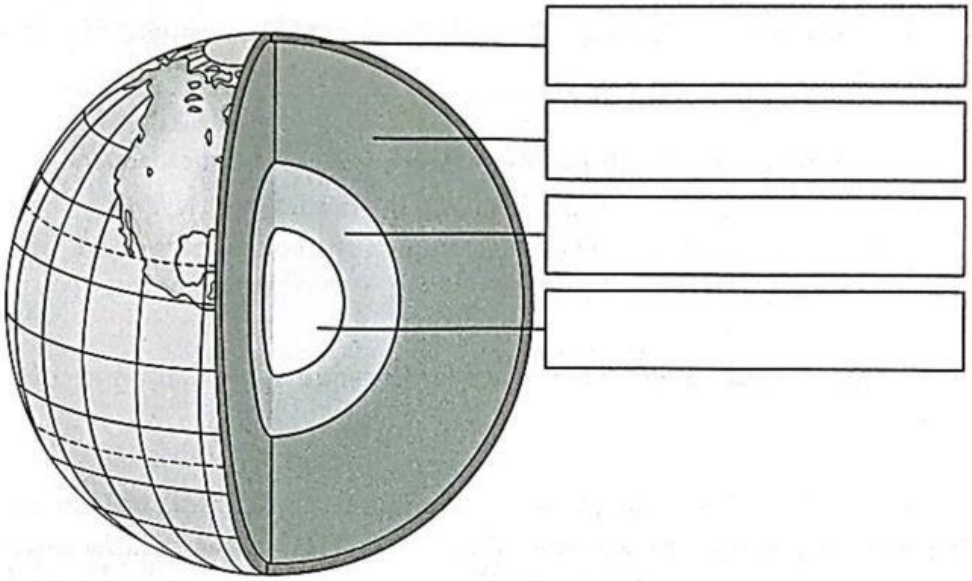

II. Read. Fill in the blanks.

The structure of the Earth is made up of different layers: the crust, the mantle and the core.

The crust is the thin outer layer of the Earth where we live. The crust is formed of rocks.

The mantle is about 3000 km deep. This is a much thicker layer than the crust. The rocks in the mantle have been melted by heat. The melted rocks are called magma. The magma can move like a liquid.

The core is about 3400 km thick. The core is made up of the metals iron and nickel. The metals in the outer core are liquid. The inner core is solid because of the pressure of all the other layers. The temperature of the inner core is about 6000 °C. This is as hot as the surface of the Sun!

1. The Earth is made up of four different layers: the crust, the .....,

   and the core.

2. The crust is formed of .....
3. Magma can move like a .....
4. The melted rocks in the mantle are called .....
5. The metals in the outer core are .....
6. The inner core is .....

LIVEWORKSHEETS