1.

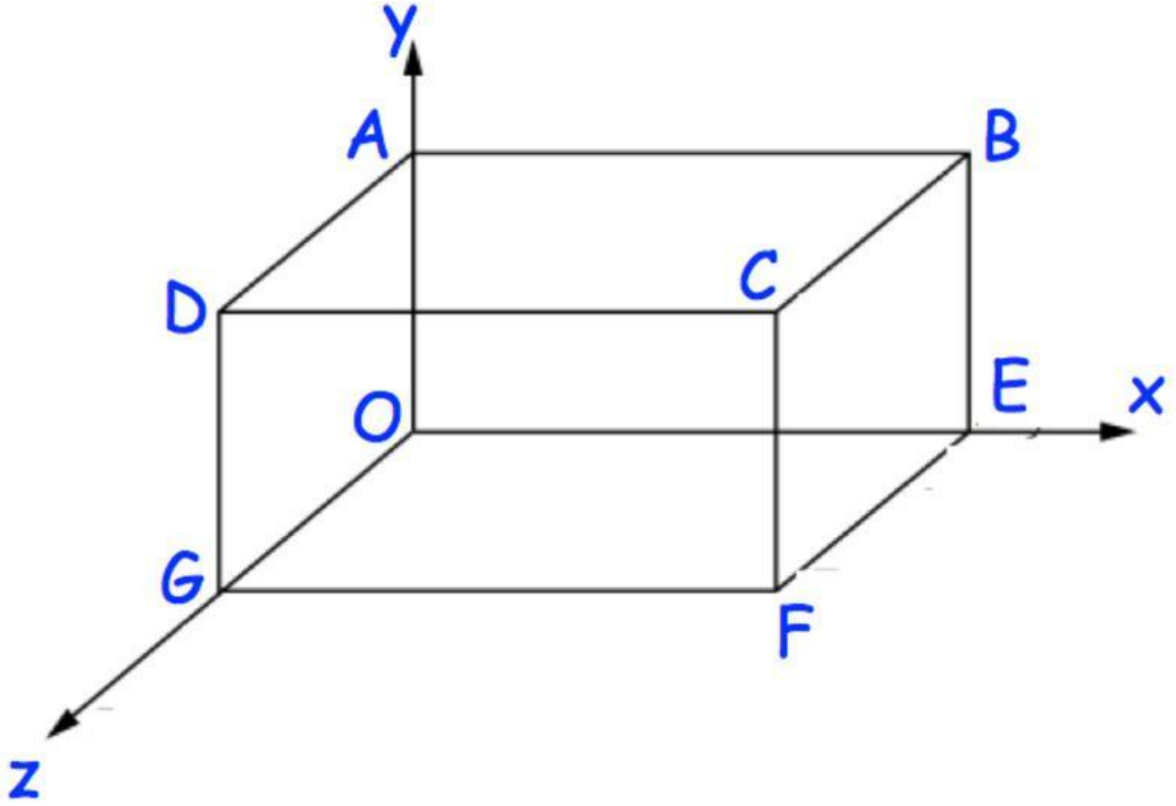

This diagram shows a cuboid drawn on a 3D grid.
C has coordinates (5, 2, 3).

(a) Write down the coordinates of the point A.

(..... , ... , ...)
(1)

(b) Write down the coordinates of the point F.

(..... , ... , ...)
(1)

The coordinate H is the midpoint of FG.

(c) Write down the coordinates of the point H.

(..... , ... , ...)
(1)

LIVEWORKSHEETS

2. Here is a cuboid drawn on a 3D grid.

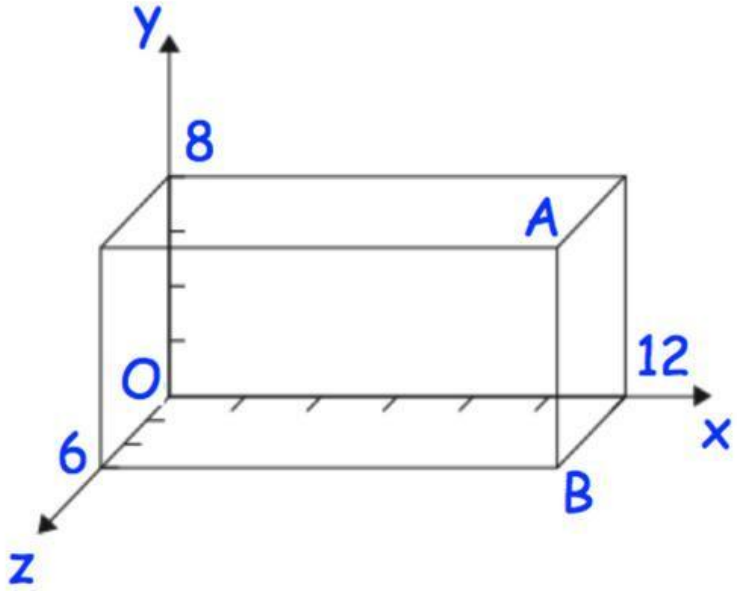

(a) Write down the coordinates of the point A.

(..... , ... , ...)
(1)

(b) Write down the coordinates of the point B.

(..... , ... , ...)
(1)

The coordinate C is the midpoint of AB.

(c) Write down the coordinates of the point C.

(..... , ... , ...)
(1)

LIVEWORKSHEETS

3. The diagram shows a cuboid on a 3D grid.

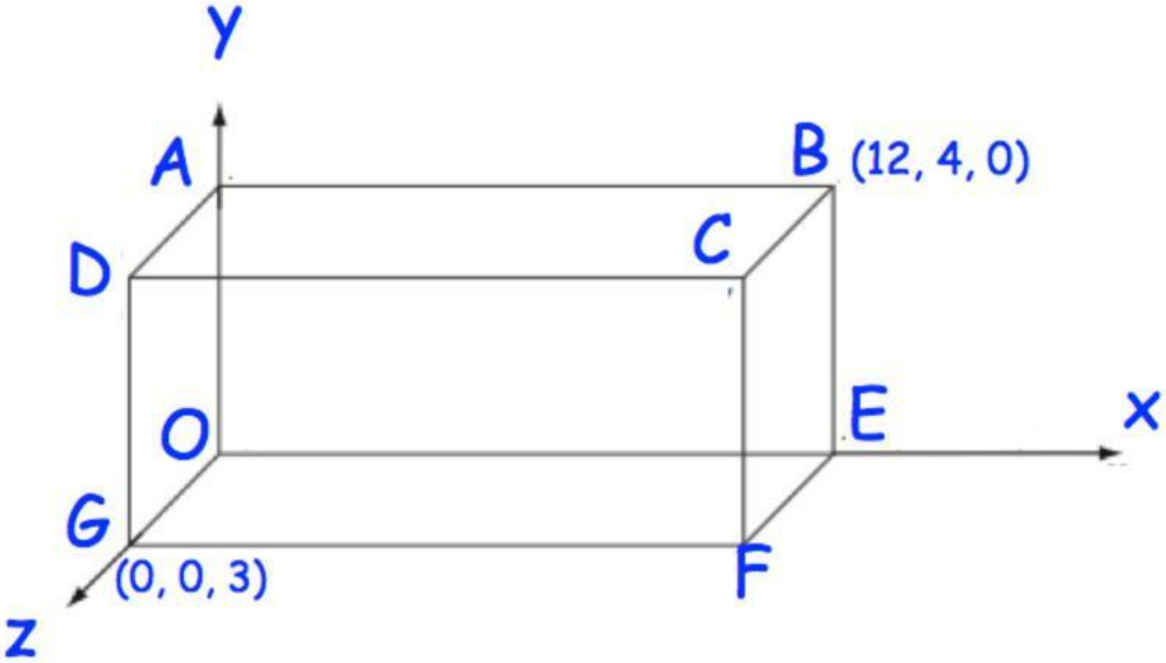

(a) Write down the coordinates of the point C.

(..... , ... , ...)
(1)

(b) Write down the coordinates of the point F.

(..... , ... , ...)
(1)

(c) Write down the coordinates of the midpoint of the line segment BG.

(..... , ... , ...)
(1)

LIVEWORKSHEETS