When we take a source e.g. a simple cell and measure the voltage when it is not used as a source – _____ current passing, we have measured in fact its electromotive force (*elektromotorické napětí*). If we measure the voltage of the same cell when it supplies current e.g. for a bulb in a torch, the value is _____the electromotive force. It is a general property of any source. The good quality sources have almost _____effect in the value of voltage. We can describe the behaviour of the source using a theoretical quantity _____ resistance.

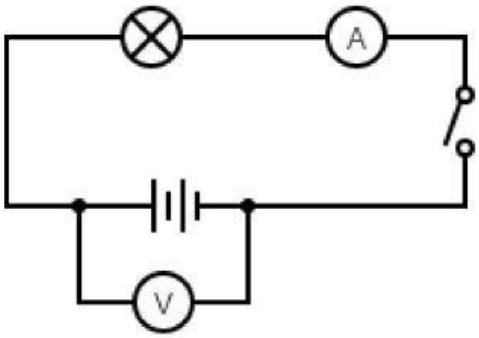

LIVEWORKSHEETS