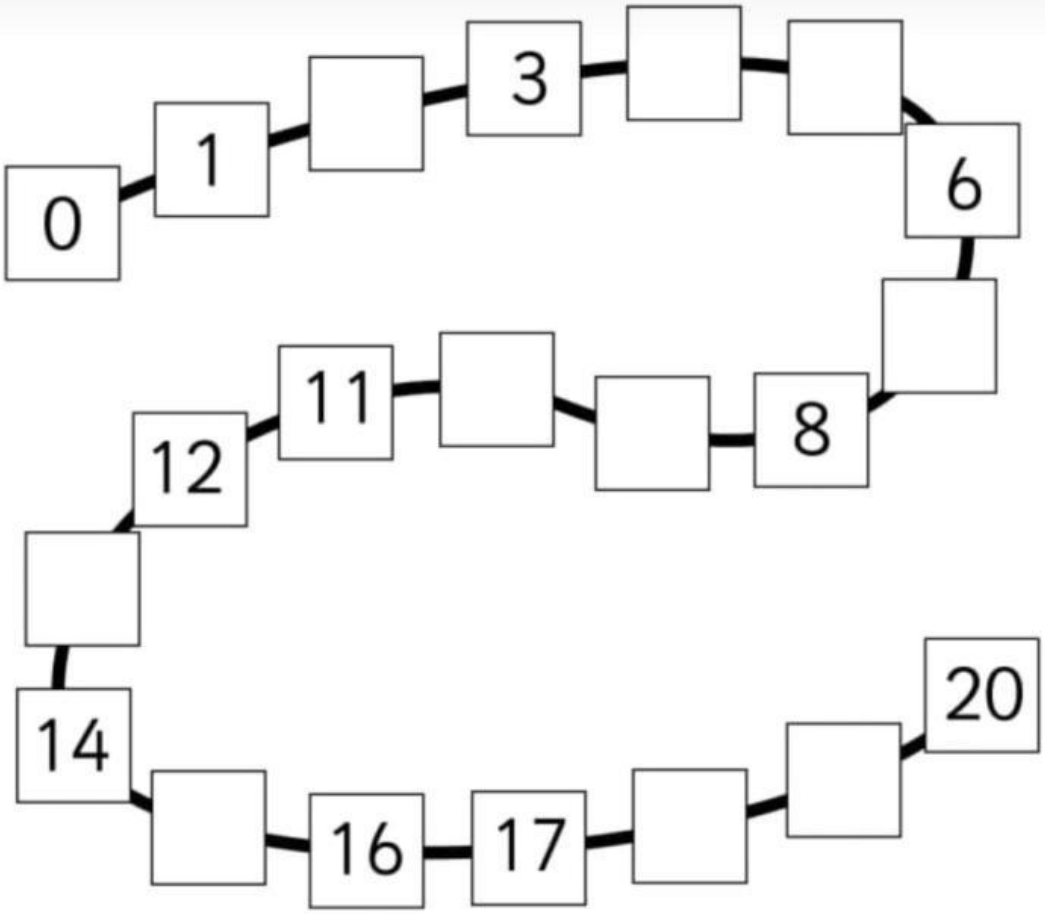

2	10	9	15	19
13	5	4	18	7

LIVEWORKSHEETS