Name:

REVIEW HOW TO MEASURE THE THING USING VERNIER CALIPER, MICROMETER, AND NERACA OHAUS

A. Answer the following questions correctly, this is about vernier caliper

Example:

KETELITIAN 0,01 CM

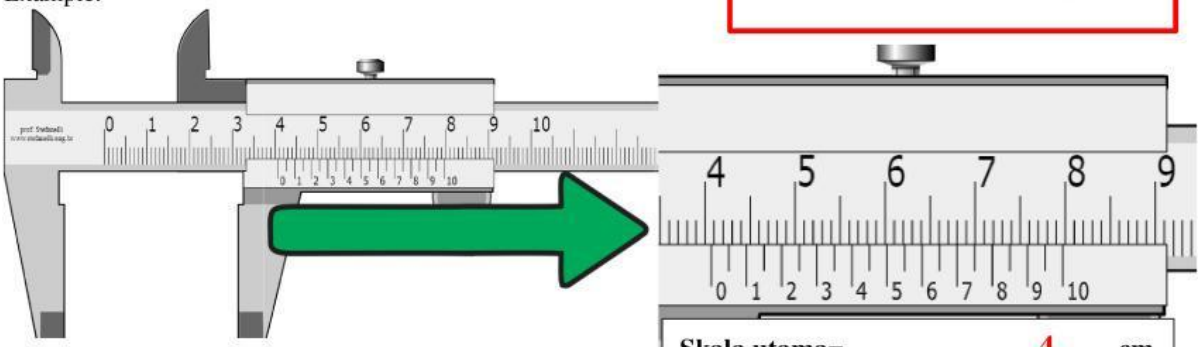

Skala utama= 4 **cm**

Skala Nonius= 7 **x 0,01=** 0,07 **cm**

Total = 4,07 **cm**

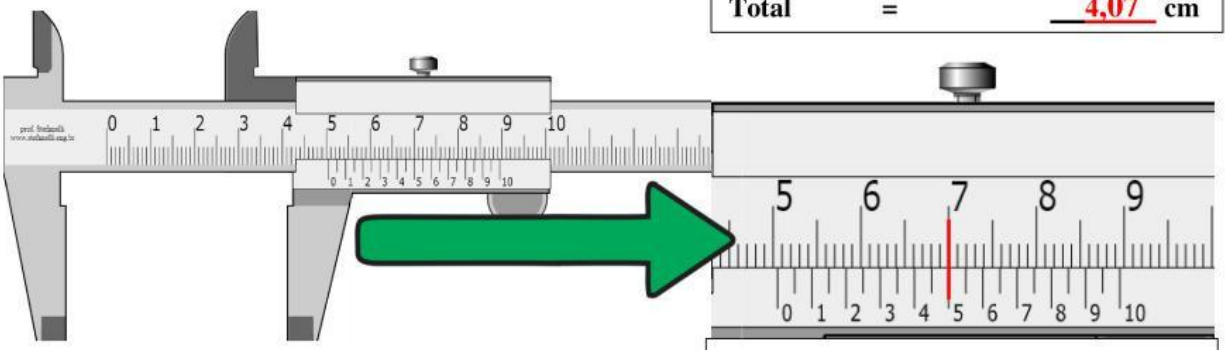

Skala utama= _____ **cm**

Skala Nonius= _____ **x 0,01=** _____ **cm**

Total = _____ **cm**

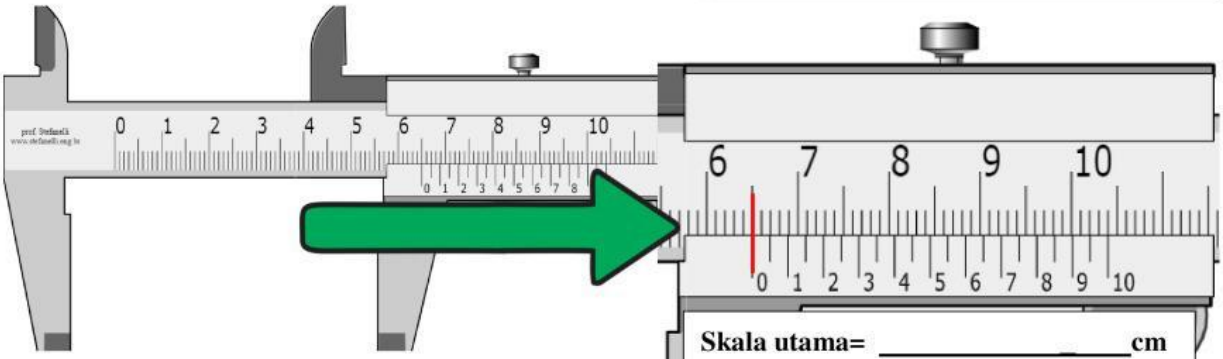

Skala utama= _____ **cm**

Skala Nonius= _____ **x 0,01=** _____ **cm**

Total = _____ **cm**

LIVEWORKSHEETS

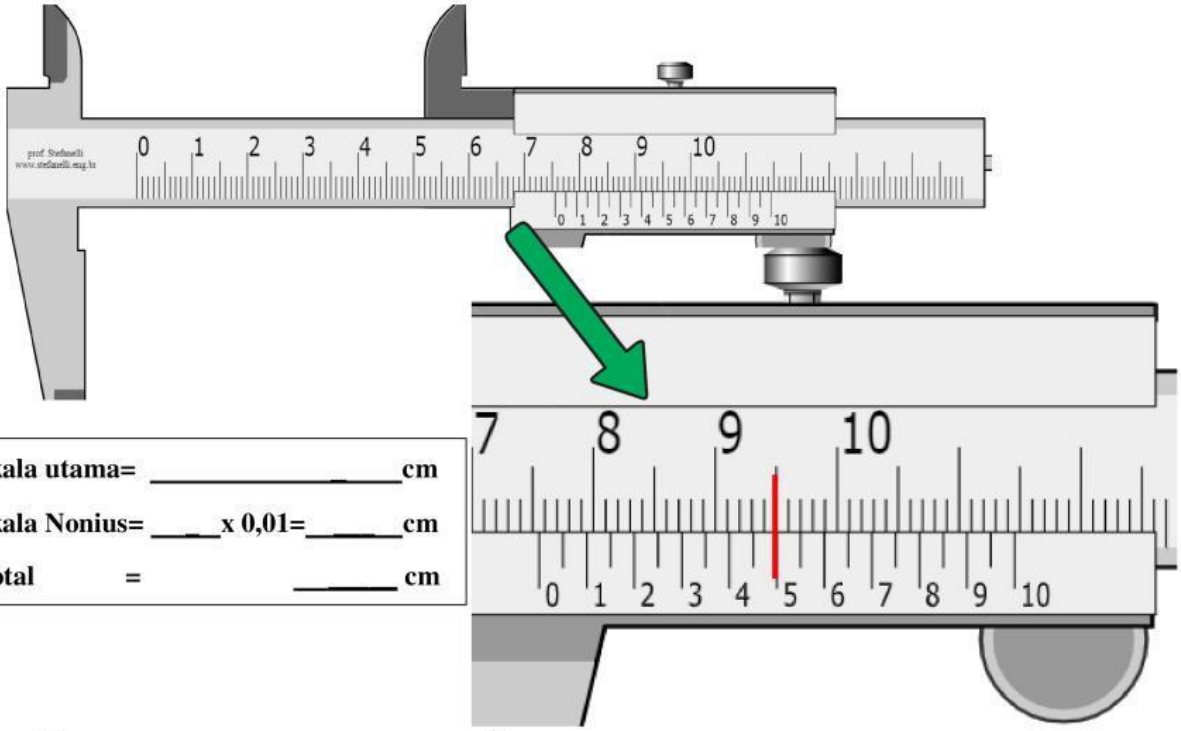

Skala utama= _____ **cm**

Skala Nonius= ____ **x 0,01=** _____ **cm**

Total = _____ **cm**

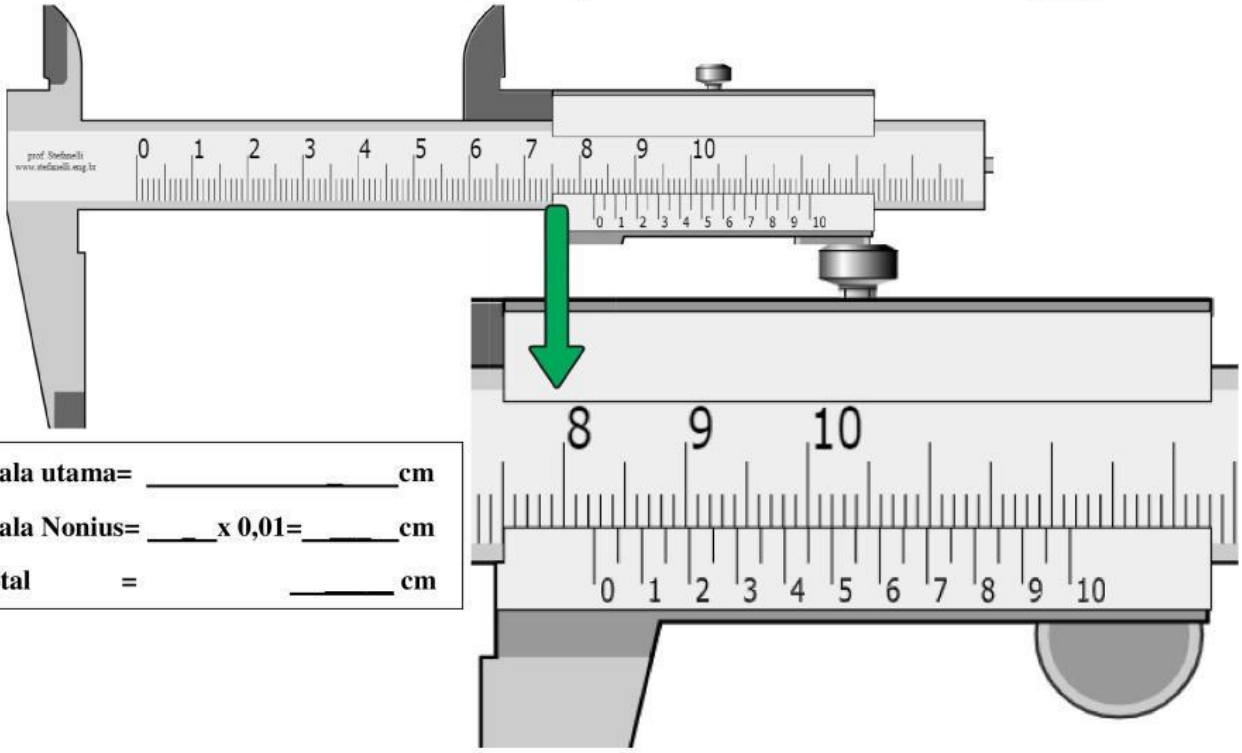

Skala utama= _____ **cm**

Skala Nonius= ____ **x 0,01=** _____ **cm**

Total = _____ **cm**

LIVEWORKSHEETS

B. Micrometer

KETELITIAN 0,01 mm

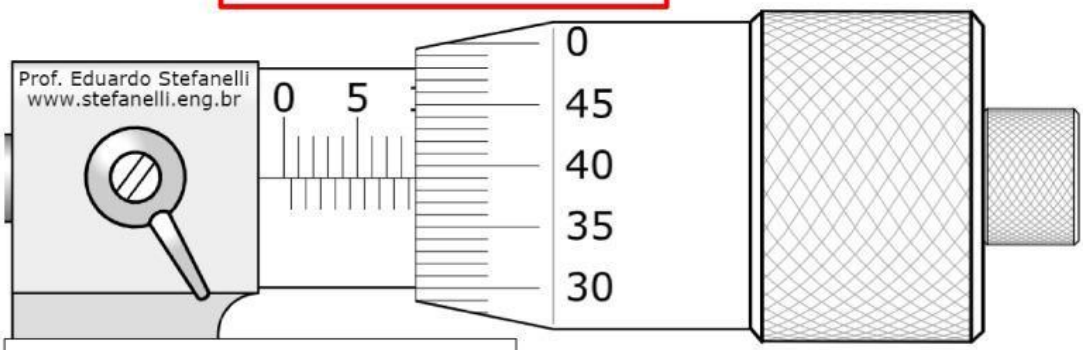

Skala utama= _____ **8,5** **mm**

Skala Putar= __39__ **x 0,01=** __**0,39**__ **mm**

Total = __**8,89**__ **mm**

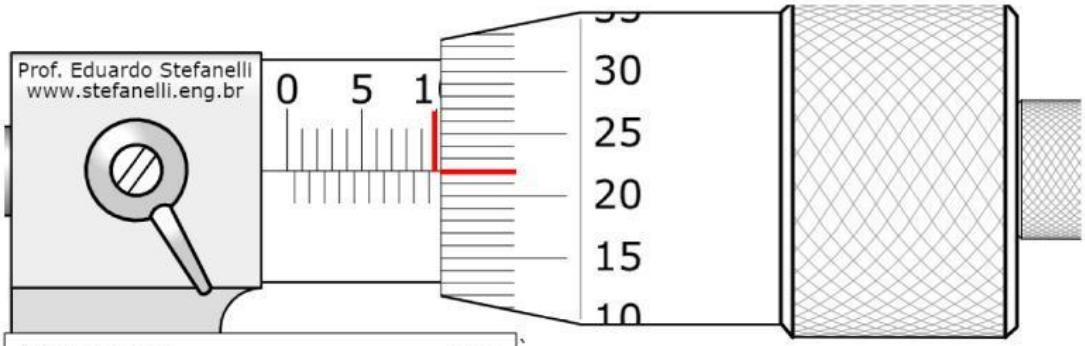

Skala utama= _____ **mm**

Skala Putar= _____ **x 0,01=** _____ **mm**

Total = _____ **mm**

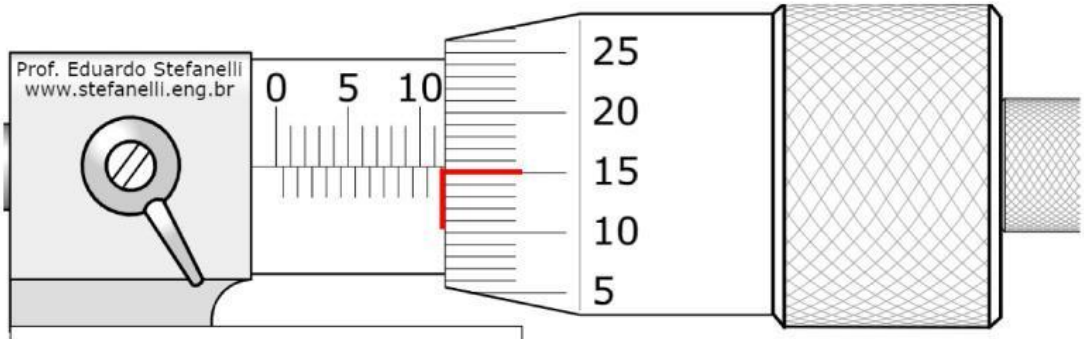

Skala utama= _____ **mm**

Skala Putar= _____ **x 0,01=** _____ **mm**

Total = _____ **mm**

LIVEWORKSHEETS

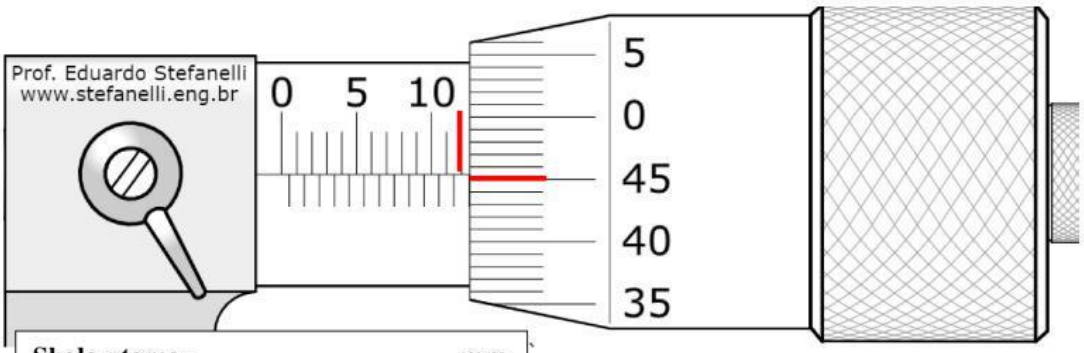

Skala utama= _____ **mm**

Skala Putar= _____ **x 0,01=** _____ **mm**

Total = _____ **mm**

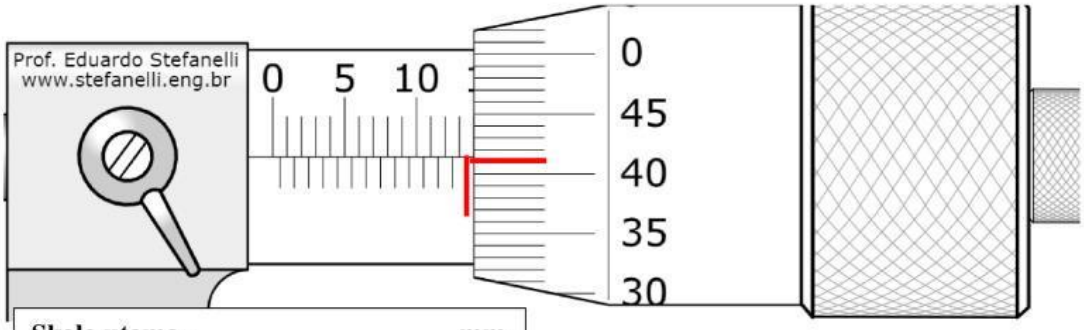

Skala utama= _____ **mm**

Skala Putar= _____ **x 0,01=** _____ **mm**

Total = _____ **mm**

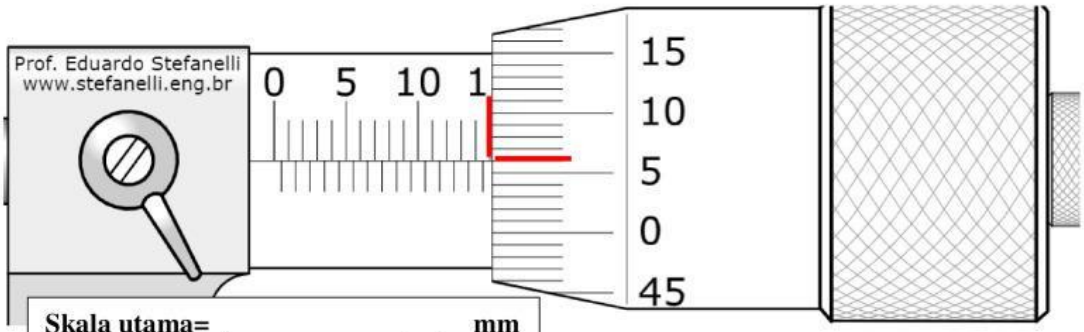

Skala utama= _____ **mm**

Skala Putar= _____ **x 0,01=** _____ **mm**

Total = _____ **mm**

LIVEWORKSHEETS

Neraca Ohaus

Ketelitian 1 gram

C. Neraca Ohaus

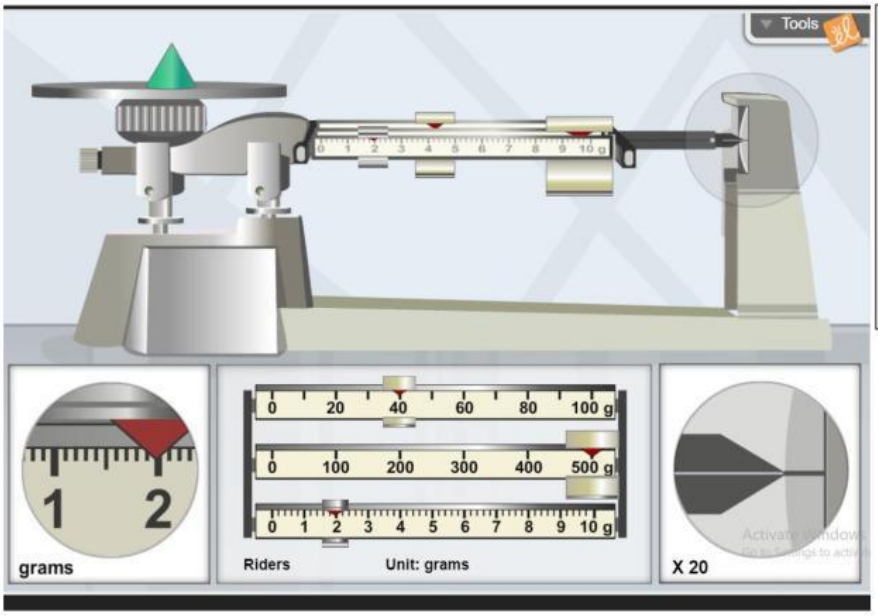

Ratusan = 500 gram

Puluhan = 40 gram

Satuan = 2 gram

Total = 542 gram

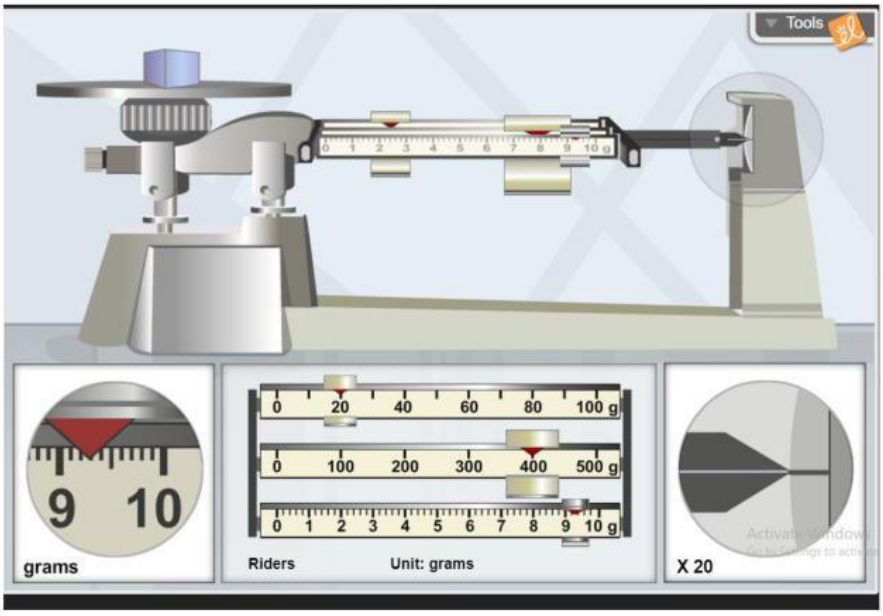

Ratusan = _____ gram

Puluhan = _____ gram

Satuan = _____ gram

Total = _____ gram

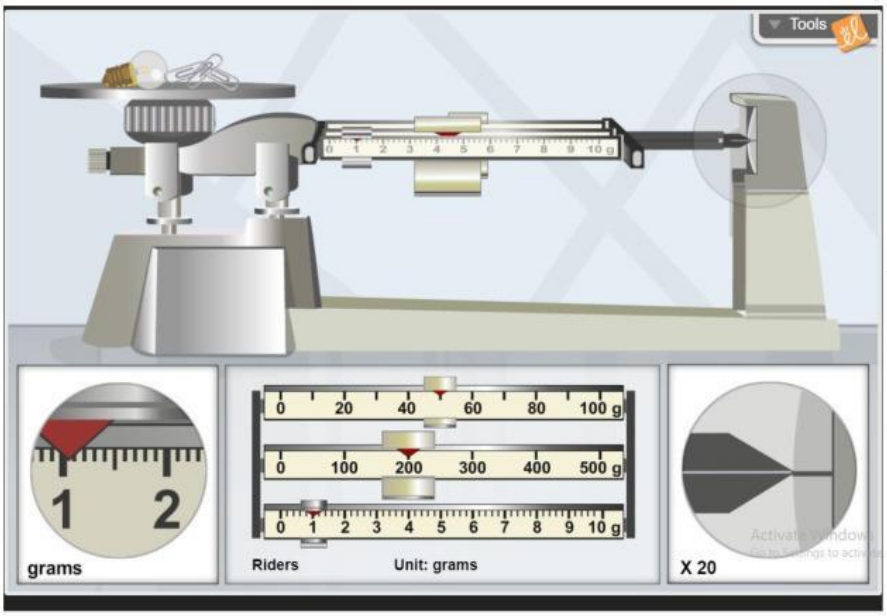

Ratusan = _____ gram

Puluhan = _____ gram

Satuan = _____ gram

Total = _____ gram

LIVEWORKSHEETS

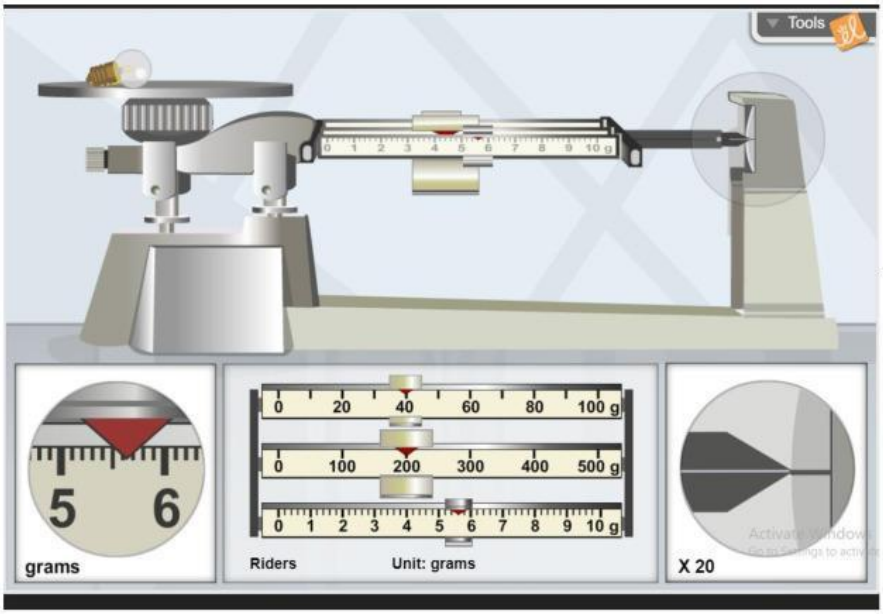

Ratusan = _____ gram

Puluhan = _____ gram

Satuan = _____ gram

Total = _____ gram

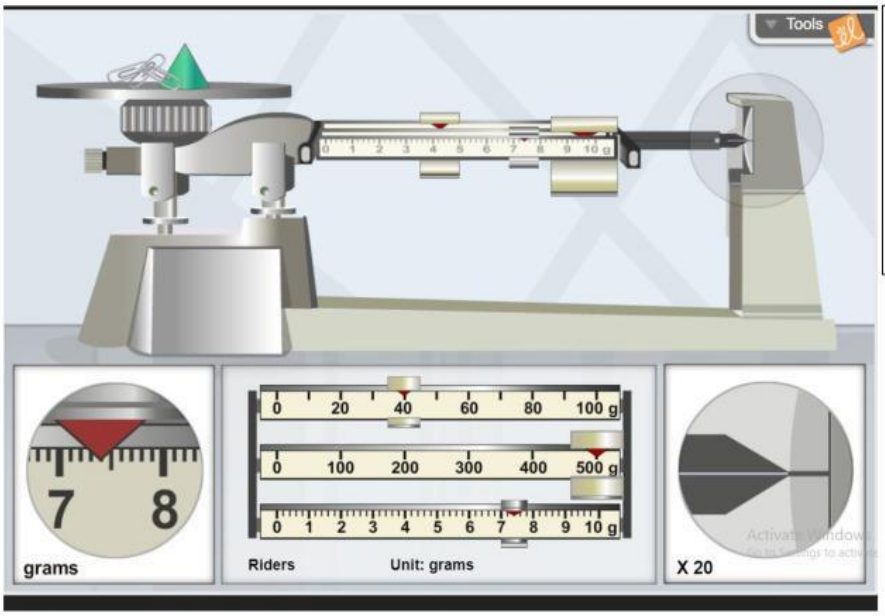

Ratusan = _____ gram

Puluhan = _____ gram

Satuan = _____ gram

Total = _____ gram

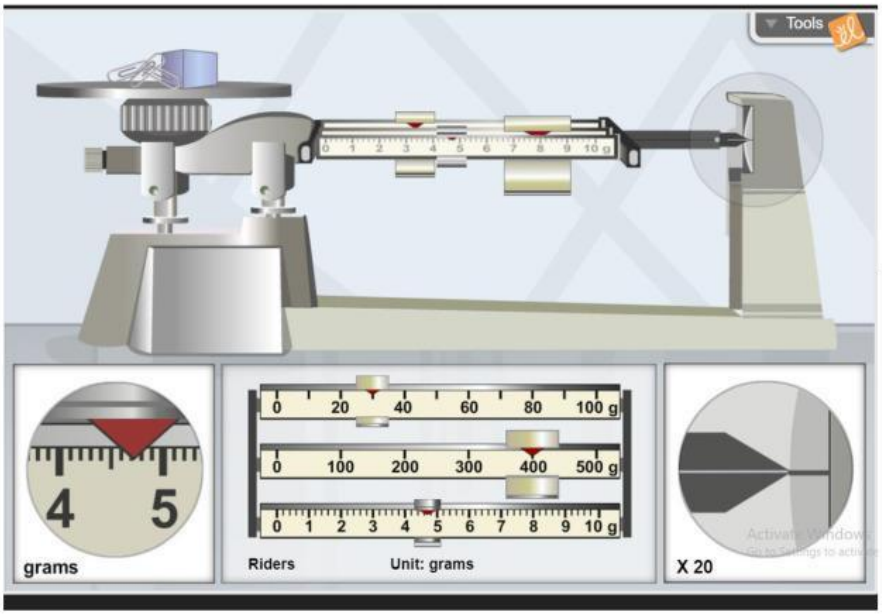

Ratusan = _____ gram

Puluhan = _____ gram

Satuan = _____ gram

Total = _____ gram

LIVEWORKSHEETS