10 Questions 21–26

Complete the flow-chart below.

*Choose **SIX** answers from the box and write the correct letter, **A–I**, next to questions 21–26.*

A	actors
B	furniture
C	background noise
D	costumes
E	local council
F	equipment
G	shooting schedule
H	understudies
I	shopowners

FILM PROJECT

visit locations and discuss **21** .....

↓

contact the **22** ..... about roadworks

↓

plan the **23** .....

↓

hold auditions and recheck availability of the **24** .....

↓

choose the **25** ..... from the volunteers

↓

rehearse

↓

collect **26** ..... and organise food and transport

LIVEWORKSHEETS

10 Questions 27–30

*Choose four answers from the box and write the correct letter, **A–G**, next to questions 27–30.*

A	lights
B	fixed camera
C	mirror
D	torches
E	wooden screen
F	bike
G	large box

Old water-mill

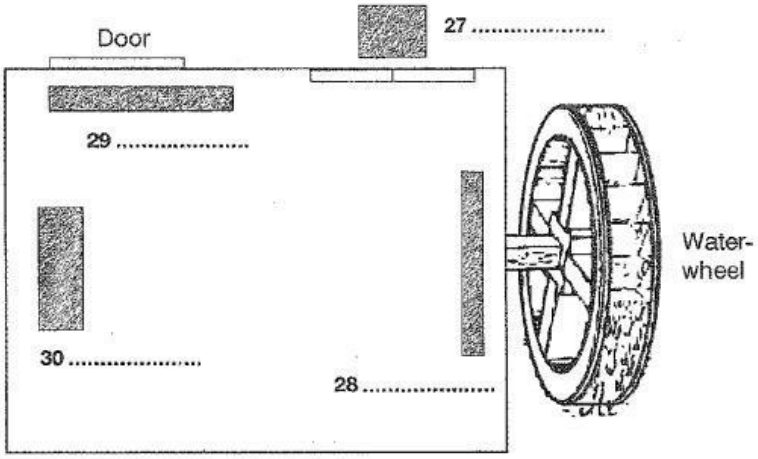

LIVEWORKSHEETS