Name: _____ Class: ____ Date: _____

Compare reflecting telescope and refracting telescope

Point of comparison	Reflecting Telescope	Refracting telescope
Definition		
Diagram		
Process		
Advantage		

Light rays are reflected and they converge.

Lenses are more durable than mirrors.

They collect more light and give clearer images.

Light rays are refracted and they converge.

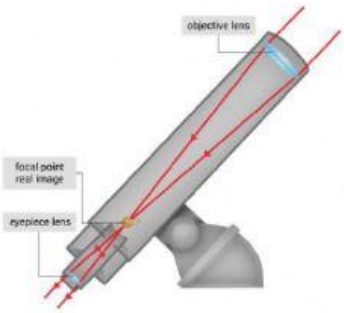

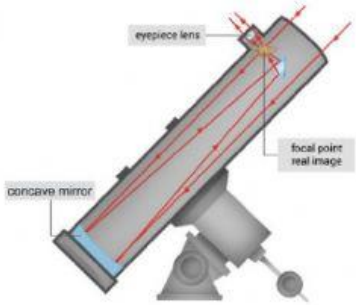

An optical instrument that uses 2 convex lenses to collect and focus light from far away objects.

An optical instrument that uses 2 mirrors and a lens to collect and focus light from far away objects.