A student used cubes of potato to investigate the effect of surface area and volume on the rate of osmosis.

The diagram shows two of the cubes of potato the student used.

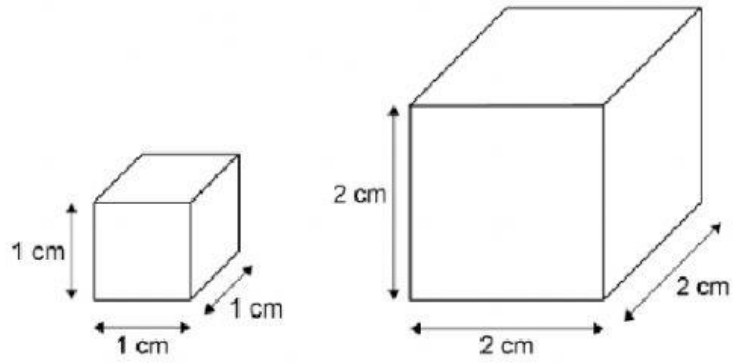

Cube 1 **Cube 2**

The surface area to volume ratio of **cube 1** is 6:1.

(a) Calculate the total surface area of **cube 2**.

Total surface area of **cube 2** = _____ cm^2

(1)

(b) Calculate the volume of **cube 2**.

_____

_____

Volume of **cube 2** = _____ cm^3

(1)

(c) Calculate the surface area to volume ratio of **cube 2**.

Use the equation:

$$\text{surface area to volume ratio} = \frac{\text{surface area}}{\text{volume}}$$

_____

_____

Surface area to volume ratio of **cube 2** = _____ : 1

(1)