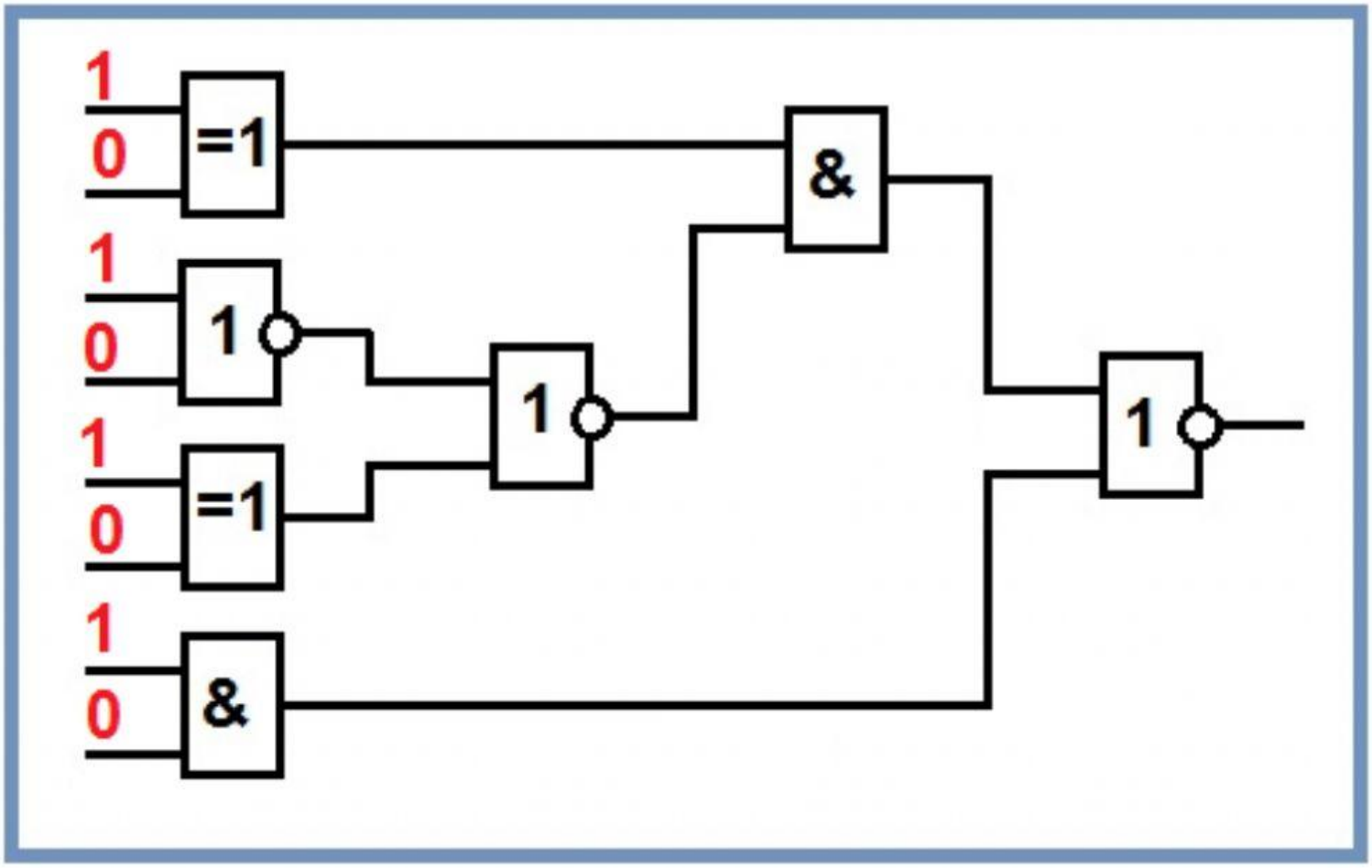
1
0
=1
1
0
1
1
0
=1
1
0
&
&
1
1