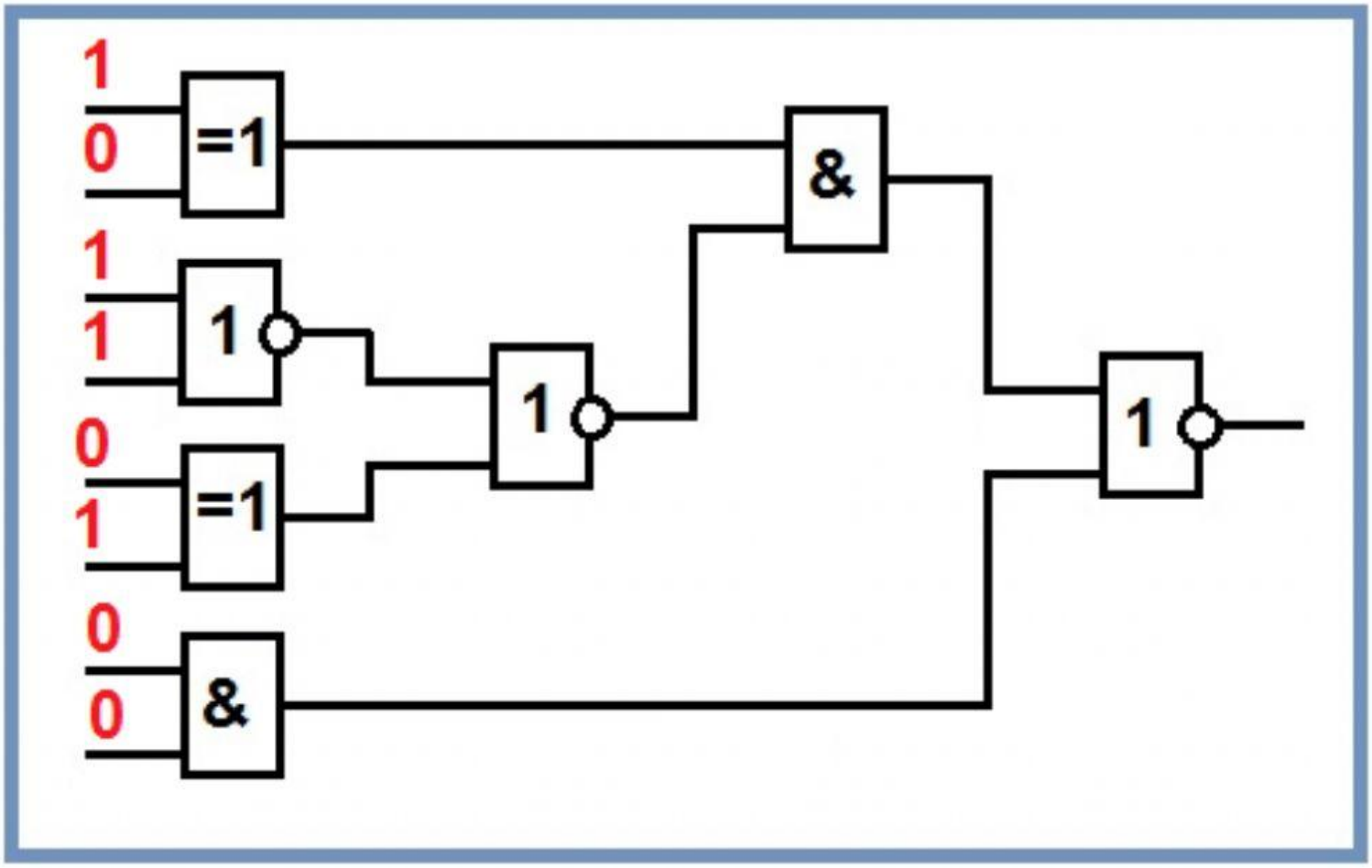
1
0
=1
1
1
1
0
1
=1
0
0
&
&
1
1