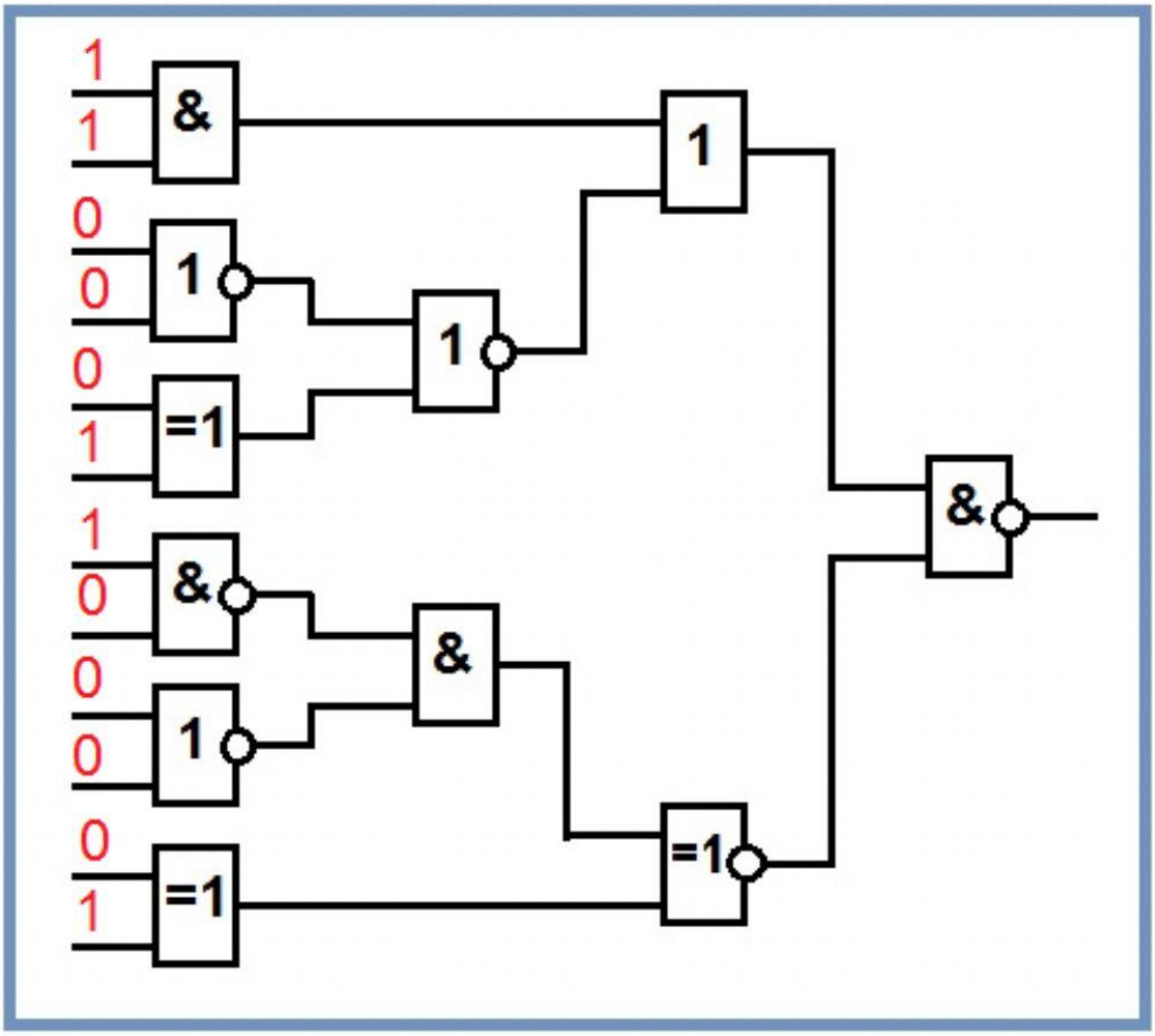
1
1
&
0
0
1
0
1
=1
1
0
&
0
0
1
0
1
=1
1
1
&
&
=1
&