Mathematics

Area and Perimeter

Tuesday

Work it out on paper and type only the answer in the blocks.

Find the perimeter of each figure.
All sides meet at right angles.

a)

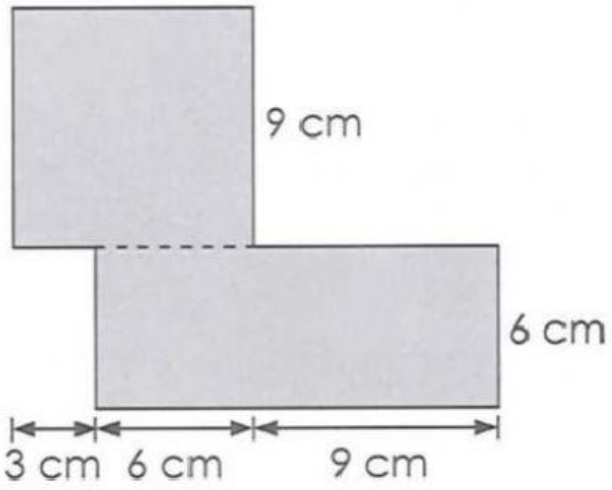

b)

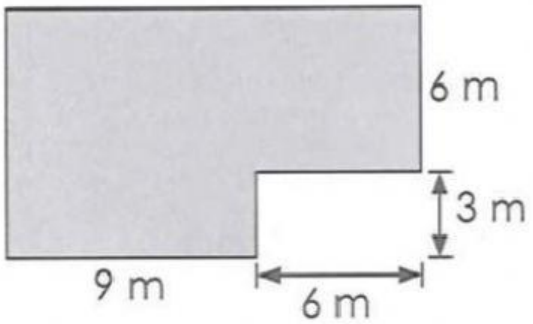

c)

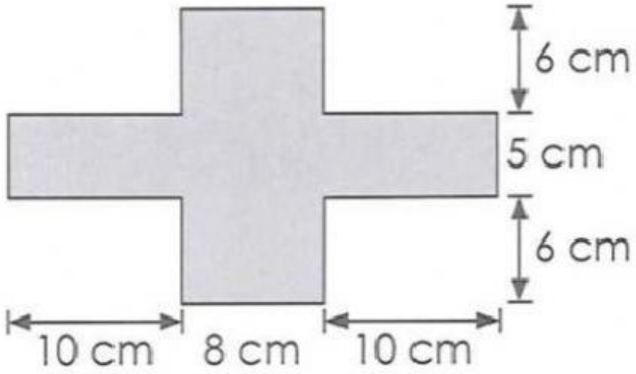

Work it out on paper and type only the answer in the blocks.

Find the perimeter of each figure.
All sides meet at right angles.

a)

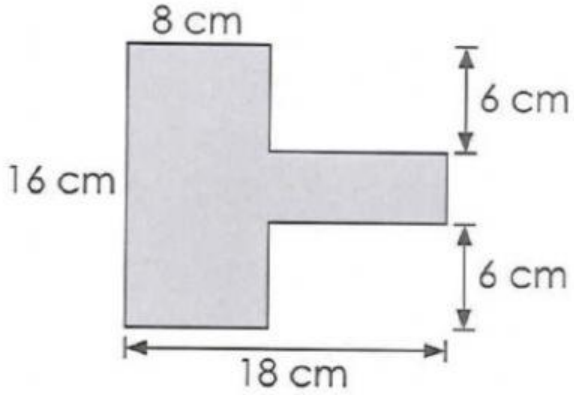

b)

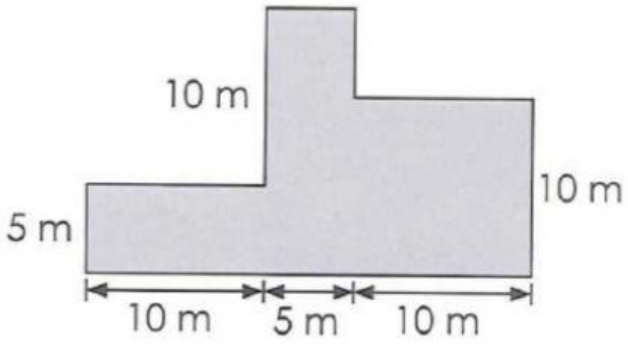
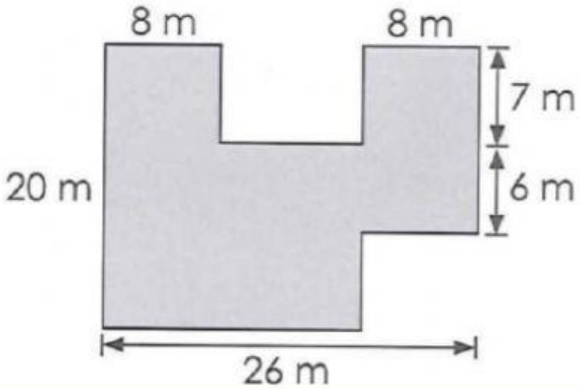
c)