Mathematics

Rectangles and Squares

Wednesday

Press play

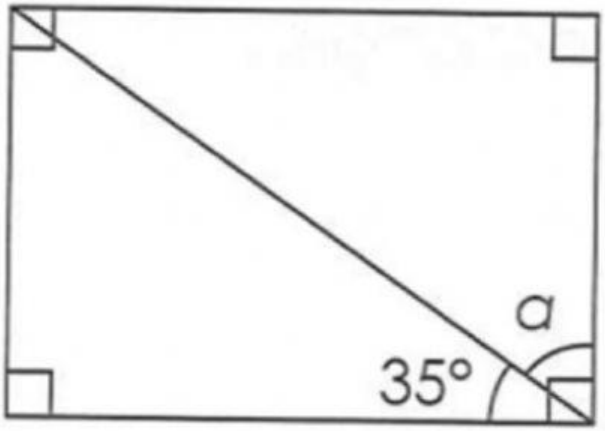

Measure of $\angle a = 90° - 35°$

$= 55°$

Press play

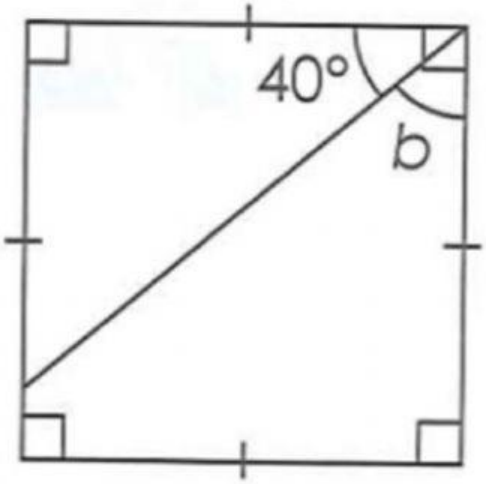

Measure of $\angle b = 90° -$

$=$

Press play

DO

Find the measures of the unknown angles in the square and the rectangle.

a

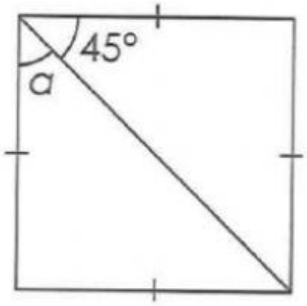

Measure of ∠a

= ____ – ____

= ____

b

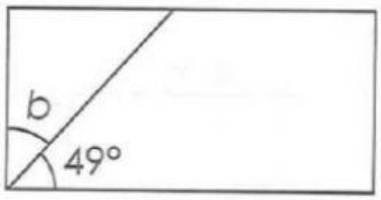

Measure of ∠b

= ____ – ____

= ____

c

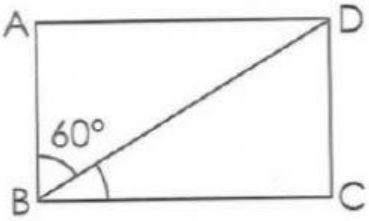

Measure of ∠CBD = ____

d

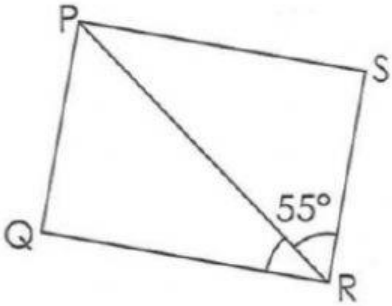

Measure of ∠PRQ = ____

e

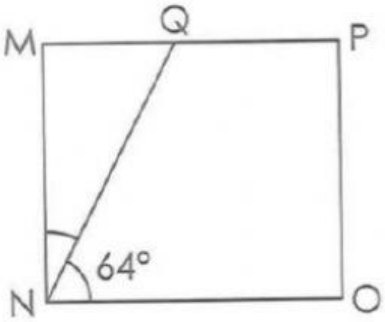

f

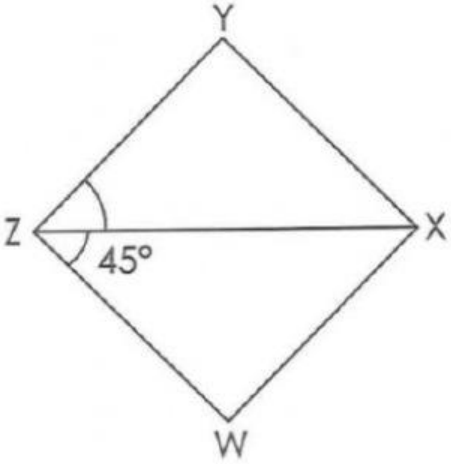

Press play

DO

2. Find the the measures of the unknown angles in the squares and rectangles.

a) PQRS is a square.

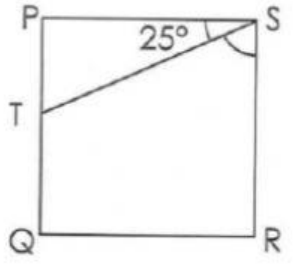

Measure of ∠TSR = ____

b) CDEF is a rectangle.

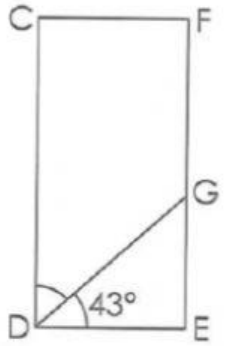

Measure of ∠CDG = ____

c) STUV is a square.

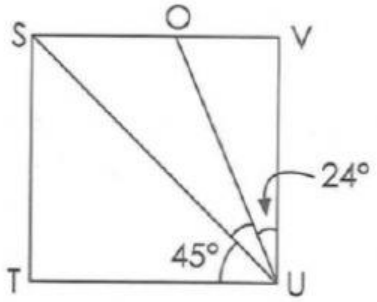

Measure of ∠SUO = ____

d) ABCD is a rectangle.

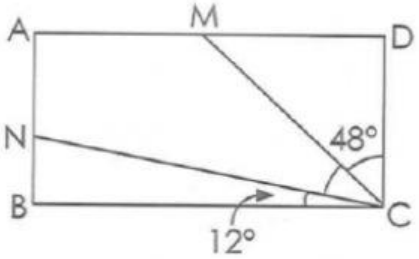

Measure of ∠NCM = ____

e) WXYZ is a rectangle.

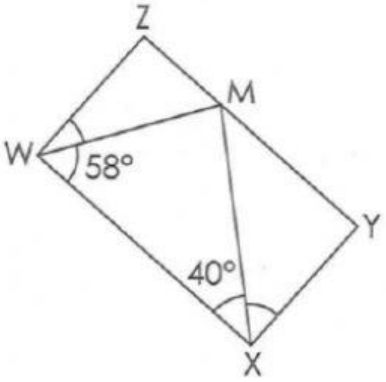

Measure of ∠ZWM = ____

Measure of ∠MXY = ____

f) HIJK is a square.

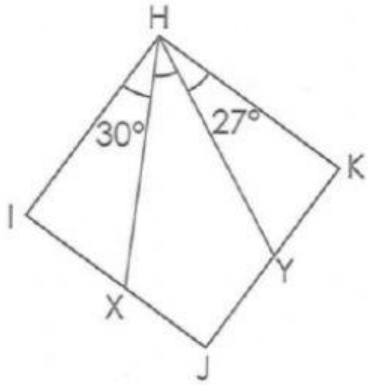

Measure of ∠KHI = ____

Measure of ∠XHY = ____