Name: _____ Class: _____ Date: _____

Practice 3 Measuring in Centimetres

(1) Fill in the blanks.

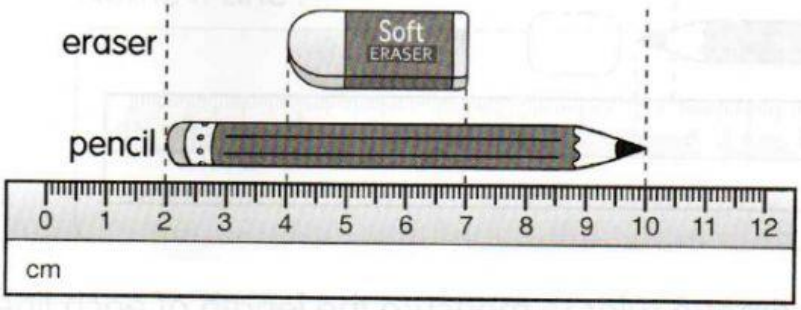

(a) The pencil is _____ cm long.

(b) The eraser is _____ cm long.

(2) Fill in the blanks.

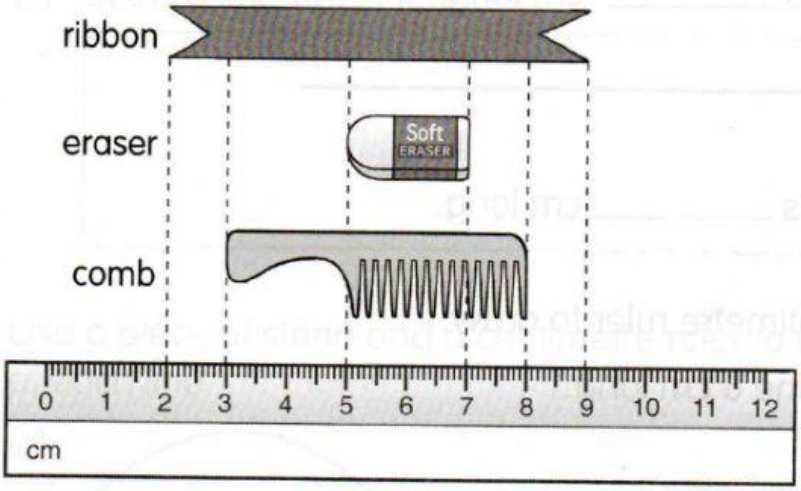

(a) The length of the comb is _____ cm.

(b) The length of the ribbon is _____ cm.

(c) The length of the eraser is _____ cm.

© 2014 Marshall Cavendish Education Pte Ltd

LIVEWORKSHEETS

(3) Tick (✔) the correct way to measure the length of the pencil.

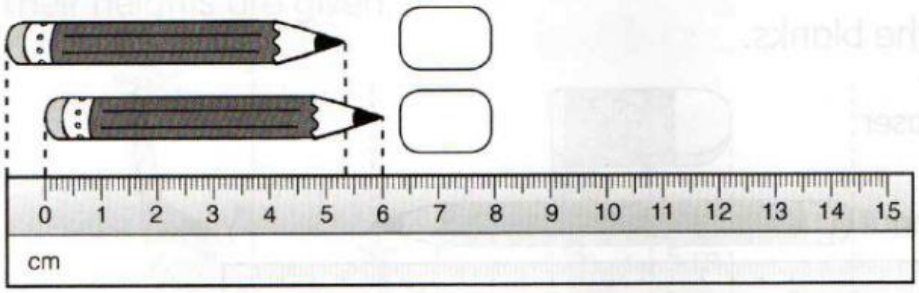

(4) Use your centimetre ruler to measure the length of each line.

(a) _____

The line is _____ cm long.

(b) _____

The line is _____ cm long.

(c) _____

The line is _____ cm long.

(5) Use your centimetre ruler to draw.

(a) Draw a line 6 cm long.

(b) Draw a line 2 cm shorter than the line in (a).

© 2014 Marshall Cavendish Education Pte Ltd

LIVEWORKSHEETS

(6) Use your centimetre ruler to draw.

(a) Draw a line 5 cm long.
Name it Line X.

Draw a line 6 cm longer than Line X.

(b) Draw a line 10 cm long.

(7) Use a piece of string and a centimetre ruler to find the length of each line.

(a) _____ cm

(b) _____ cm

© 2014 Marshall Cavendish Education Pte Ltd

LIVEWORKSHEETS

(c) With the same piece of string used in (a), form another line. Paste the string here.

Does it have the same length as the line in (a)? _____

(8) Cut a piece of string of the same length as the drawing below. Then, place the string on a centimetre ruler to find its length.

(a) How long is the string? _____ cm

(b) The same piece of string is used to form the following lines.

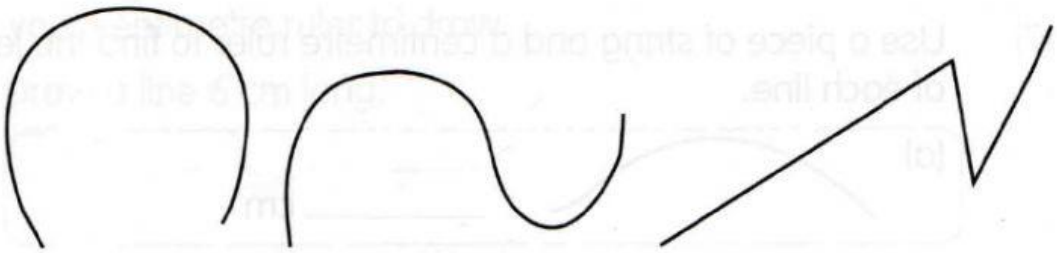

A B C

Do they all have the same length? _____

LIVEWORKSHEETS