Electrical Circuits

Match the symbol to the circuit component it represents.

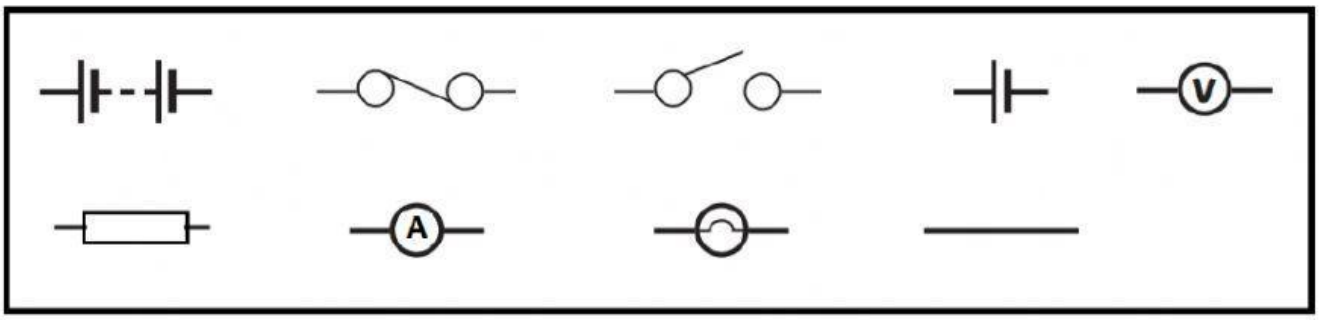

One Battery		**Closed Switch**	
Wire		**Ammeter**	
Open Switch		**Resistor**	
Voltmeter		**Two Batteries**	

Select the piece of equipment being described in each point.

	Made of thin metal that allows electron movement between components.
	Lights up when electricity is able to pass through.
	Measures voltage of a circuit.
	Open and closes the circuit to turn it on and off.
	Measures current of a circuit.
	Provides the potential energy to produce electrical energy.
	Packed with an insulator that reduces the current of a circuit.

Select the correct unit and description of each measurement within a circuit.

Current		
Voltage		
Resistance		

LIVEWORKSHEETS

Below are three different circuits, A, B, and C.

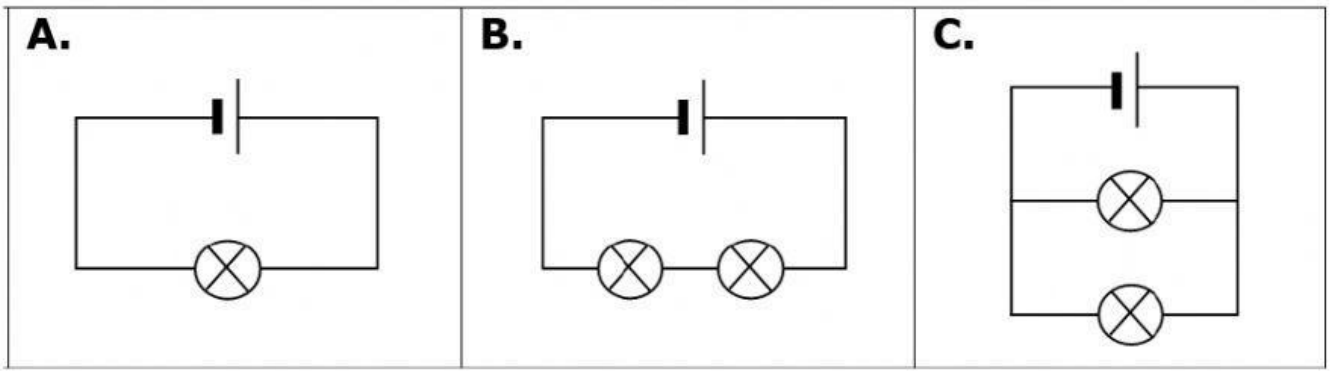

For the circuits below, determine if they are the same as circuit A, B, C, or none.

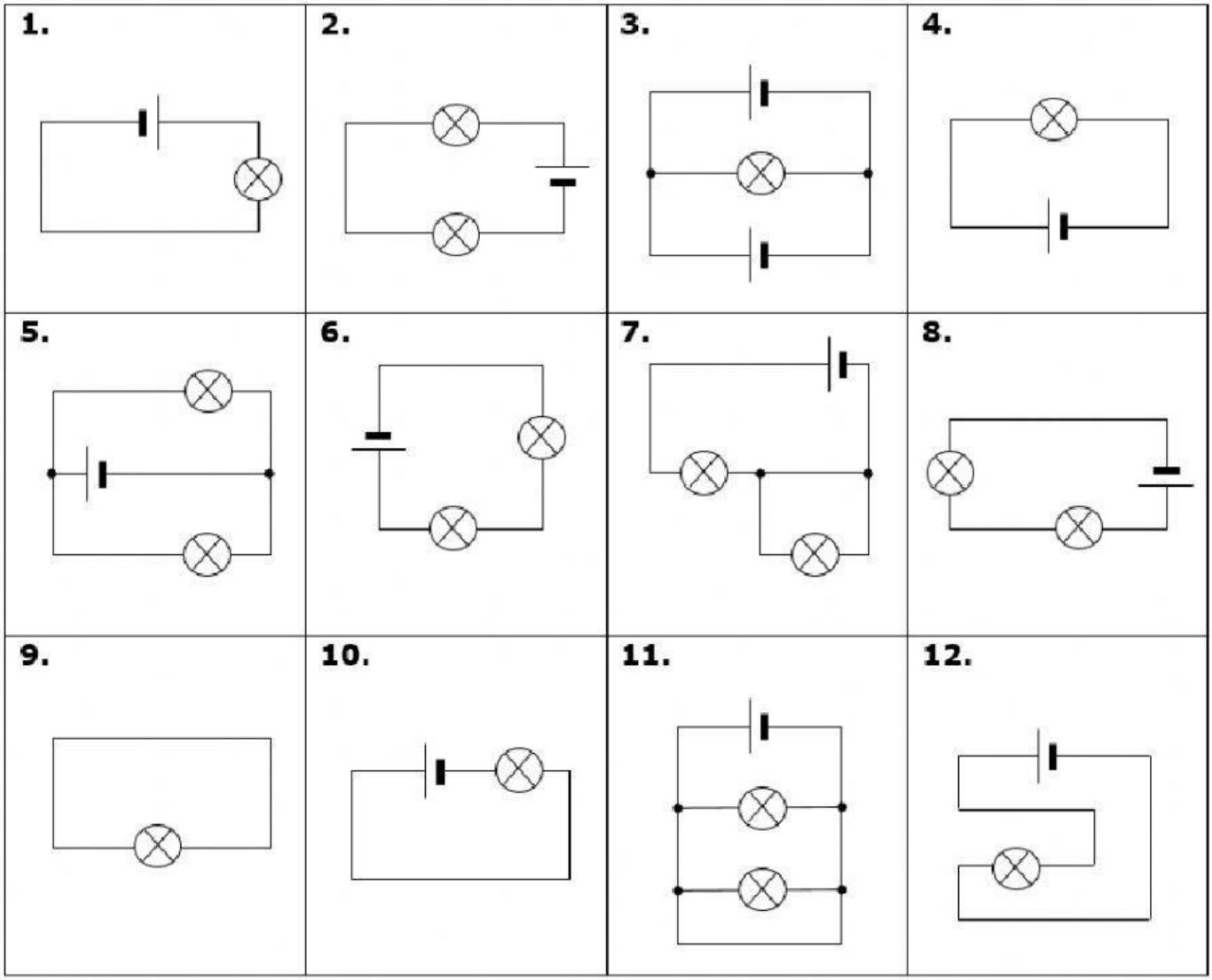

LIVEWORKSHEETS

For each circuit, determine if the globe will light up or not.

Note: is another symbol for a globe.

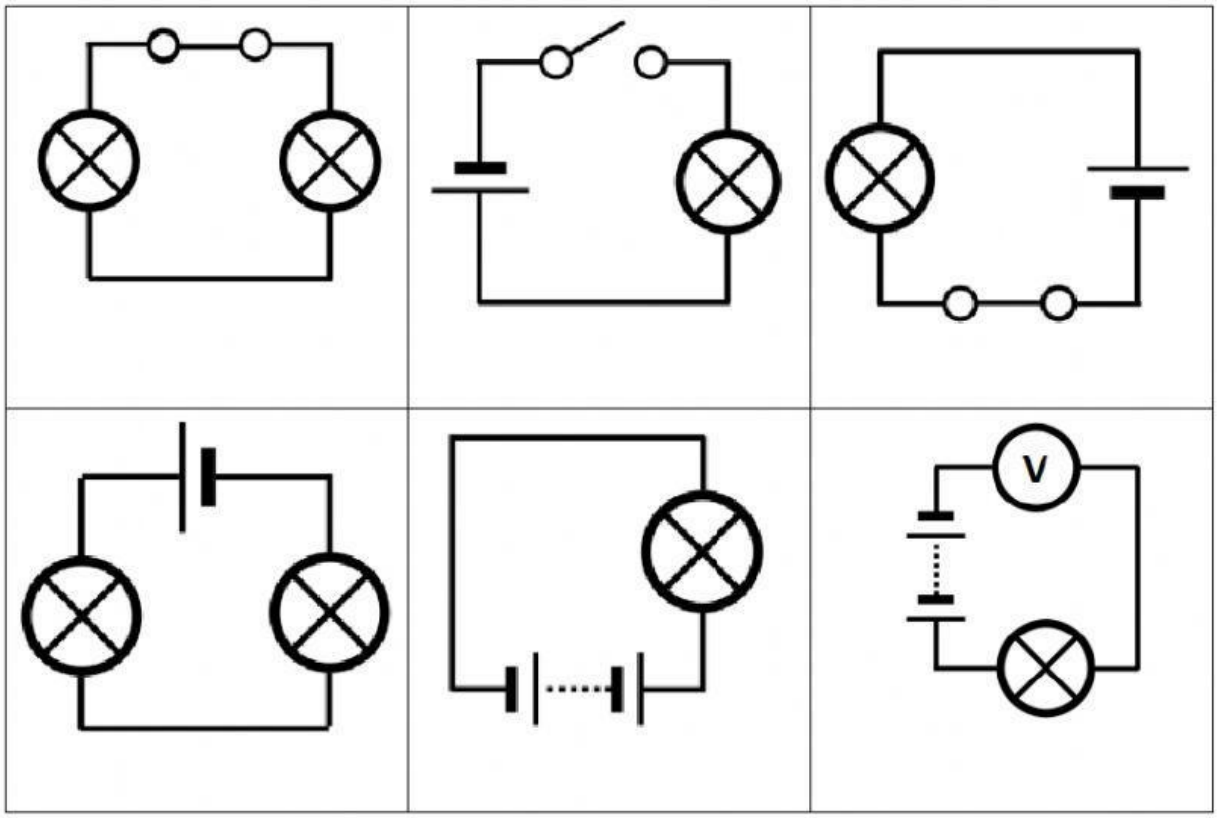

Use Ohm's Law to complete the table. Round all calculations to 2 decimal places when needed and select the appropriate units.

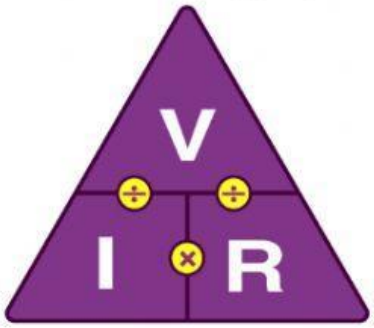

Voltage	Current	Resistance
	10	5
20	2	
	30	10
100		25

LIVEWORKSHEETS