Compound Shapes with Circles

#1. Here is a diagram of a track that King's Secondary School is thinking of adding in their field.

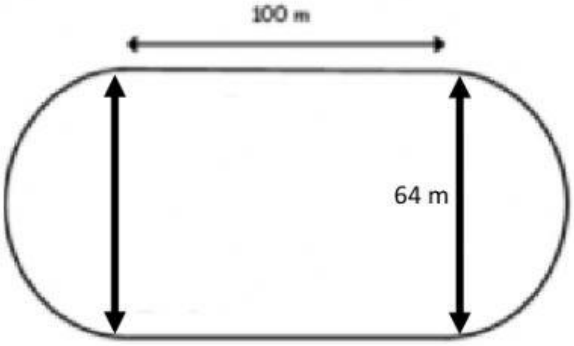

a) If someone runs one lap around the track, how far do they have to run?

b) What is the area of the inside of the track?

#2. The following measurements were taken from a basketball court in the area around the net.

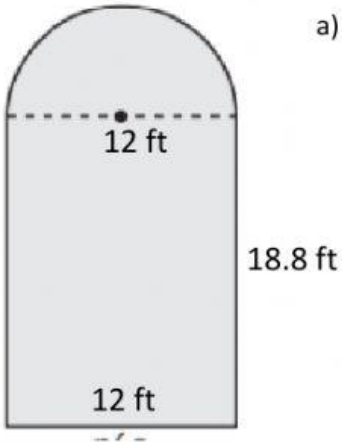

a) What is the perimeter of this entire section from the basketball court?

b) What Is the area of this entire section from the basketball court?

LIVEWORKSHEETS