Name: _____

Class: 1A1

Date: __ / __ / ____

THAI HUNG | IRIS SCHOOL

# Heavier and lighter

1. **Tick (v)** the **heavier**. **Cross (x)** the **lighter**.

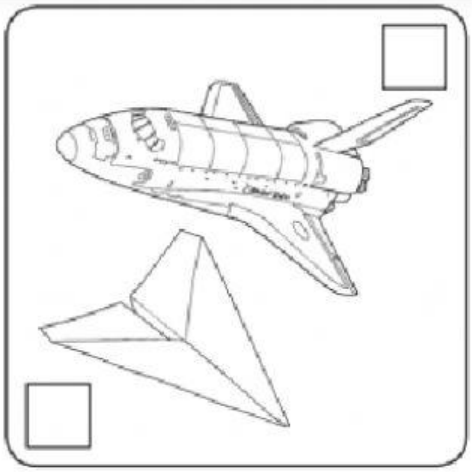

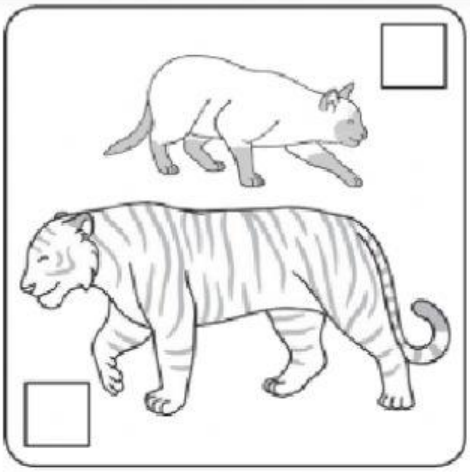

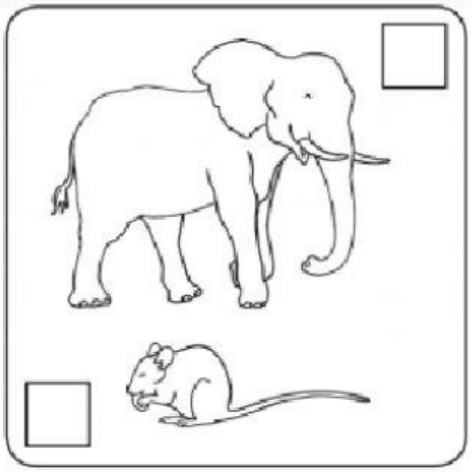

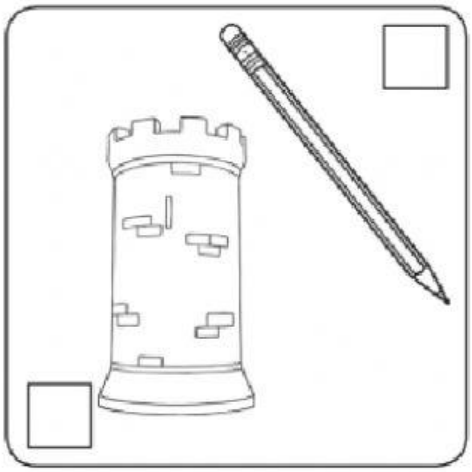

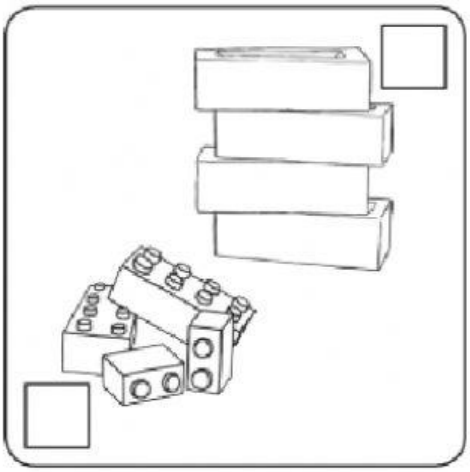

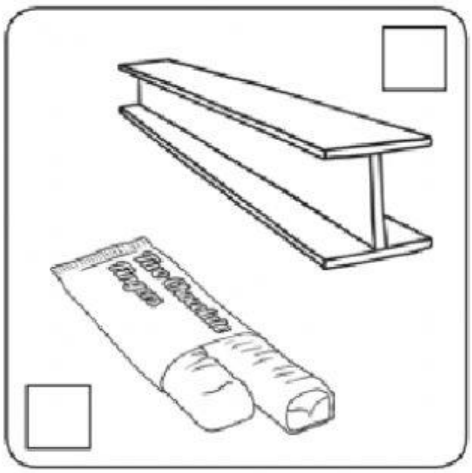

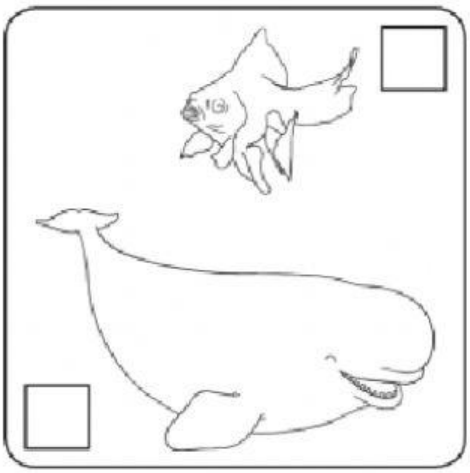

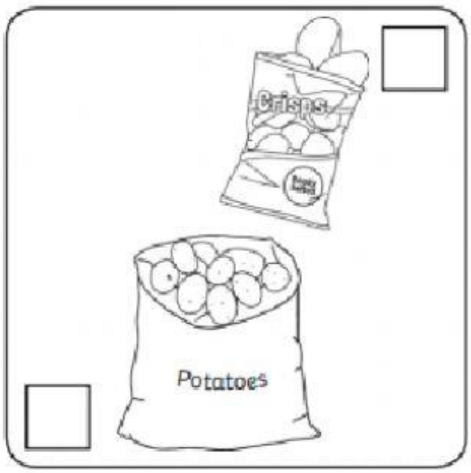


LIVEWORKSHEETS

## 2. Complete the sentences.

shoe

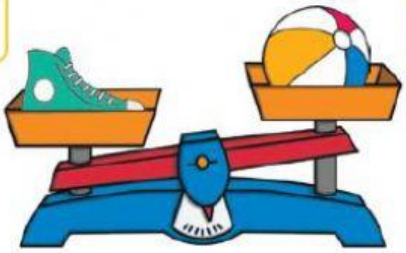

ball

The _____ is lighter.

The _____ is heavier.

boat

car

The _____ is lighter.

The _____ is heavier.

ball

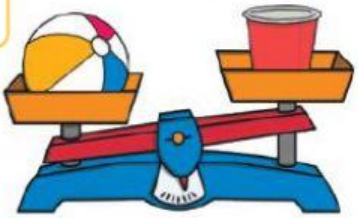

cup

The _____ is lighter.

The _____ is heavier.

## 3. True or false?

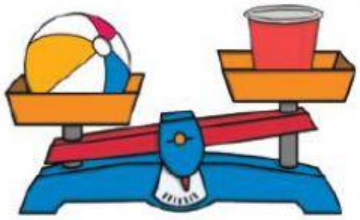

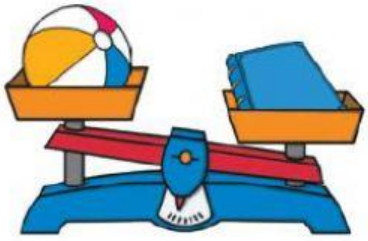

| | | |
|---|---|---|
| True | False | The ball is heavier than the cup. |
| True | False | The ball is heavier than the book. |
| True | False | The ball is lighter than the cup. |
| True | False | The ball is lighter than the book. |

LIVEWORKSHEETS