ICM INSAN CENDEKIA MADANI	Assessment Chapter 19 (Perimeter and Area)	Name :
		Class :
		Teacher :
		Date :

		Marks: 26	Score:
☐ Pre-assessment	☐ Individual guided practice		
☐ Independentpractice	✓ Formative Assessment		

Please read and answer these following questions!

No	Questions	Marks
1.	What are the perimeters of the figures in centimetres?	[4]

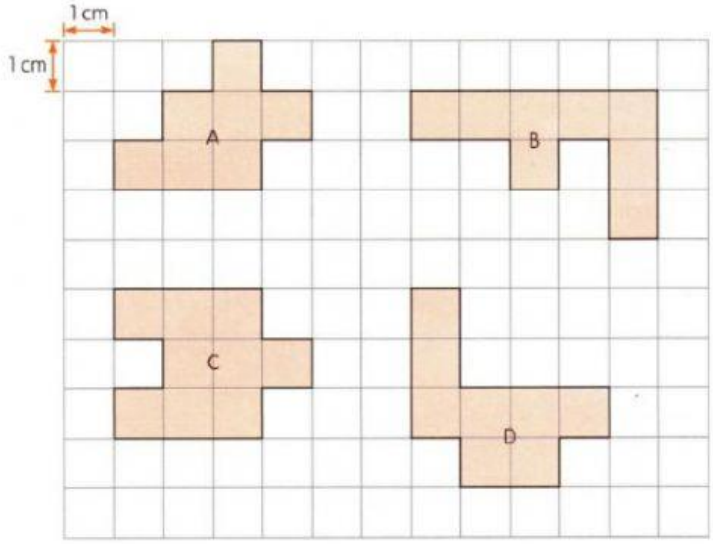

a. Perimeter of Figure A = _____ cm

b. Perimeter of Figure B = _____ cm

c. Perimeter of Figure C = _____ cm

d. Perimeter of Figure D = _____ cm

2. What is the perimeter of the figure in metres? _____ m [2]

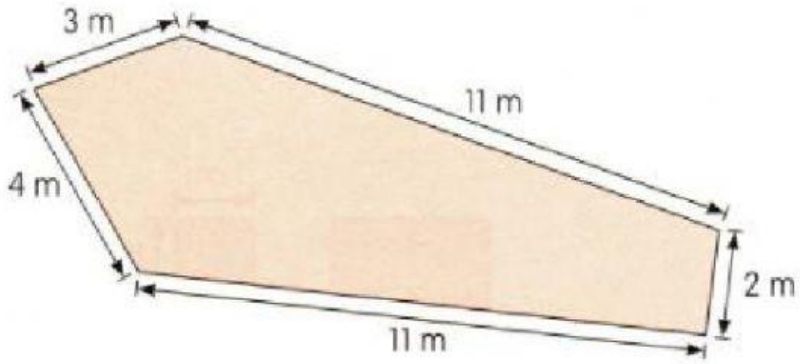

LIVEWORKSHEETS

3. What are the perimeters of the regular polygons described below? Give your answer in centimetres. [2]

   a. A regular pentagon with sides 11 cm. = _____ cm

   b. A square with sides 7 mm. = _____ cm

4. What is the perimeter of these polygon? [2]

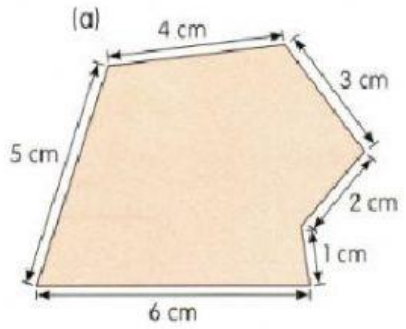

4. What is the perimeter of these polygon? _____ cm [2]

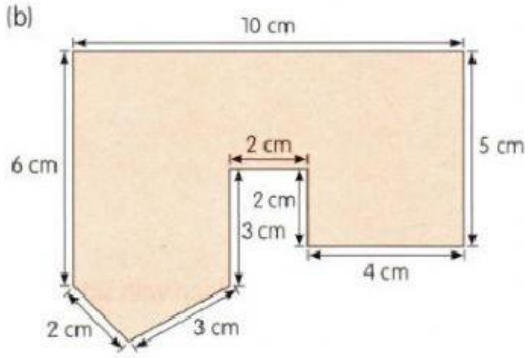

5. The length of a photo frame is 25 cm. [1]

   Its width is 20 cm.

   What is its perimeter? _____ cm

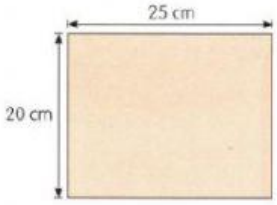

6. What are the areas of the figures? [3]

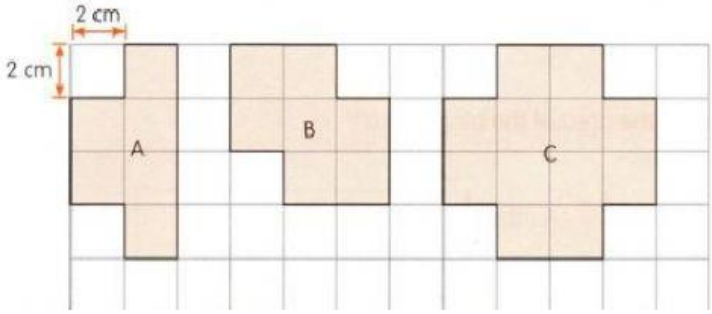

   a. Figure A = ____ cm

   b. Figure B = ____ cm

   c. Figure C = ____ cm

LIVEWORKSHEETS

7. What are the areas of the rectangle shown below? [2]

Area = _____ cm x _____ cm

= _____ cm^2

8. What are the areas of the square or rectangle shown below? [2]

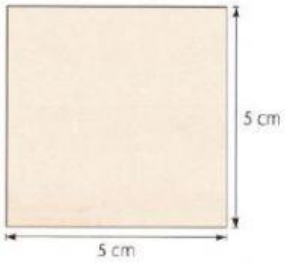

Area = _____ cm x _____ cm

= _____ cm^2

9. The length of a rectangular piece of paper is5 cm and its width is 2 cm. [4]

What is its perimeter and area?

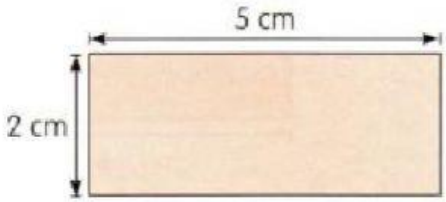

Perimeter = _____ cm

Area = _____ cm^2

10. The length of a rectangular field is 58m. [2]

Its width is half its length.

What is its area? _____ cm^2

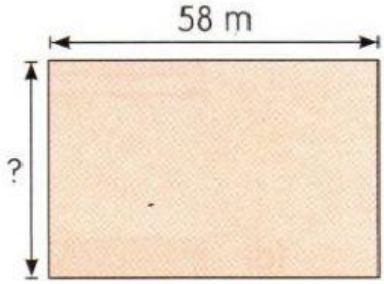

LIVEWORKSHEETS