Name: ..... Date: .....

THEME 2 – ENERGY AND FORCES.

Answer the following questions in the spaces provided.

Unit 6: Electricity.

1. Look at the picture in **Figure 1** carefully.

Figure 1

How is the boy's action dangerous?

A. Inserting objects into electrical circuits.
B. Switching off the power supply.
C. Touching appliances or switches with dry hand.
D. Touching the bare or broken wires.

2. A circuit was set up as shown in **Figure 2**.

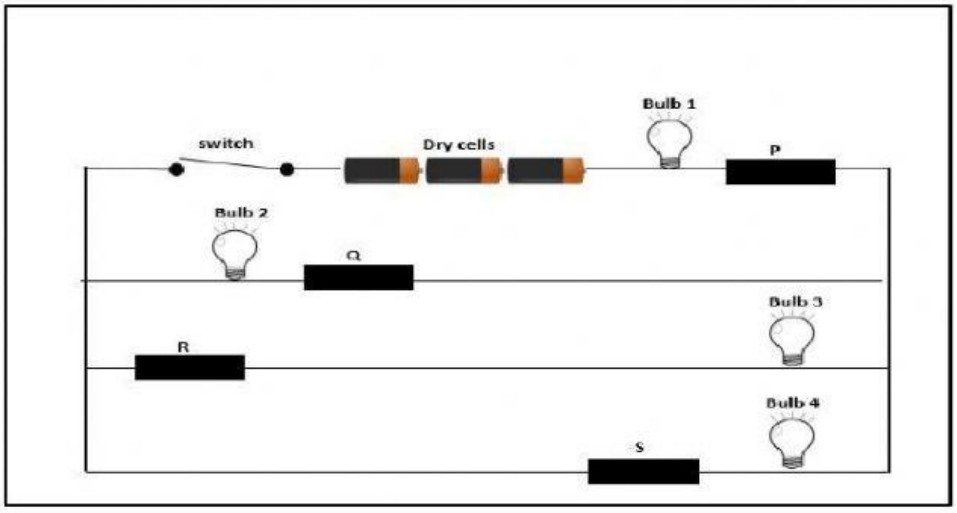

Figure 2

When the switch closes, only bulb 1 and bulb 3 light up, Identify objects *P, Q, R* and *S* correctly.

LIVEWORKSHEETS

	P	Q	R	S
A	Steel paper clip	Iron rod	Gold ring	Wooden ruler
B	Iron rod	Plastic ring	Gold ring	Rubber eraser
C	Rubber eraser	Wooden ruler	Steel paper clip	Cotton wool
D	Gold ring	Glass rod	Iron rod	Steel paper clip

3. The situation in **Figure 3** below may cause _____

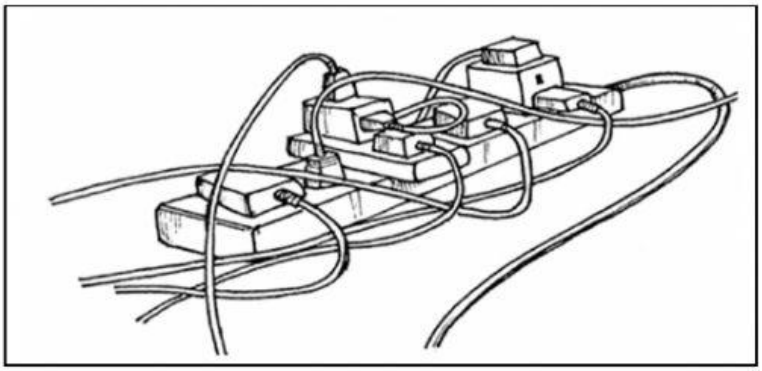

Figure 3

I. A fire breakout.
II. No effects at all.
III. The overheating of cables.
IV. The overloading of an electric circuit.

A. II only
B. I, II and III only.
C. I, III and IV only.
D. II, III and IV only.

4. Study the diagram in **Figure 4** below;

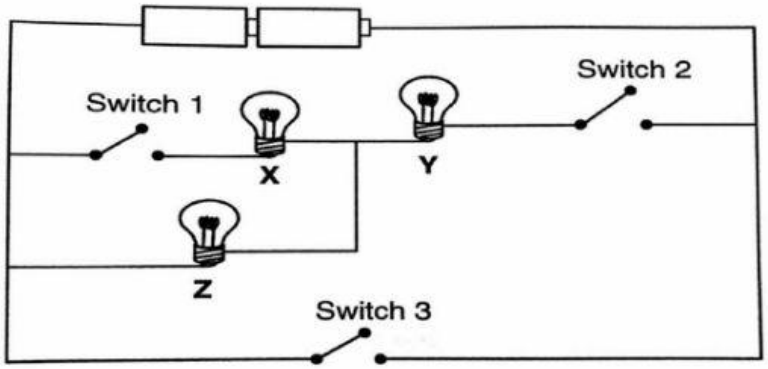

Figure 4

When only Switch 3 is closed, _____

LIVEWORKSHEETS

A. Bulb Z light up
B. Bulbs X and Y light up
C. Bulbs X, Y and Z will light up
D. Bulbs X, Y and Z will not light up

5. Siti sets up an electric circuit as shown in **Figure 5**. She found the bulb did not light up.

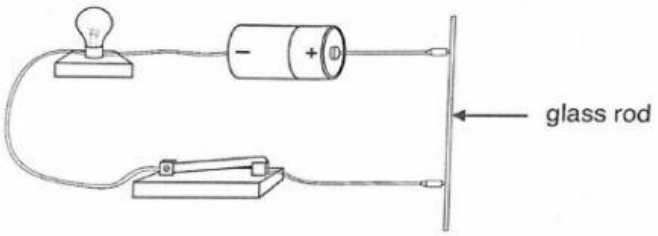

Figure 5

How can she make the bulb to light up?
A. Add more dry cells.
B. Use shorter wires and more dry cells.
C. Use two light bulbs and longer wires.
D. Replace the glass rod with an iron nail.

Marks: _____ / 5

Parents'/ Guardian's signature : _____

Parents'/ Guardian's feedbacks:

_____

_____

LIVEWORKSHEETS