Unit 7 REVISION

1. PUT MUST (V) OR MUSTN'T (X).

1 You ..... wear a helmet when you ride a moped. V

2 You ..... cycle on the pavement. **X**

3 You ..... drive when you see a man at a pedestrian crossing. **X**

4 You ..... cycle in a cycle lane. V

5 You ..... cross the road when you see the red light. V

2. WRITE THE TYPES OF ROAD FEATURES

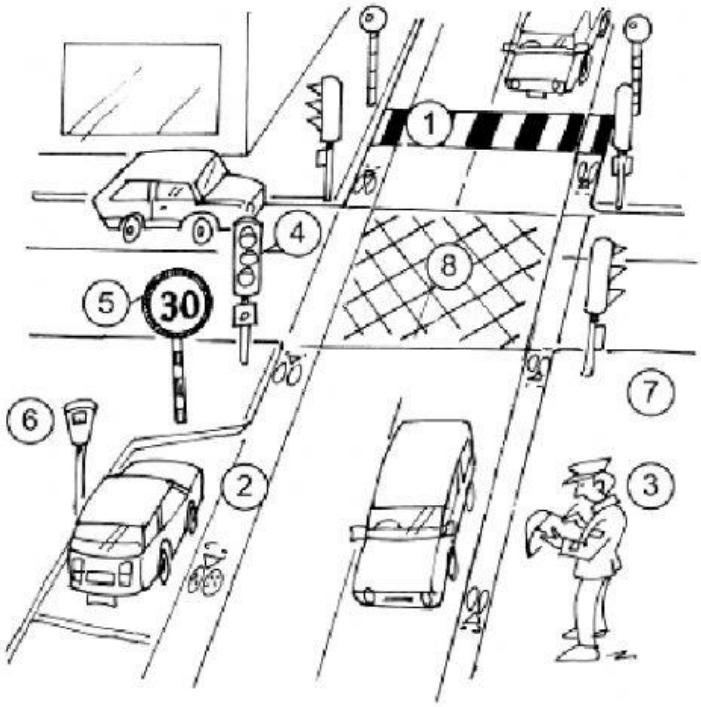

1 pedestrian crossing
2 _____
3 _____
4 _____
5 _____
6 _____
7 _____
8 _____

3. PUT FOR/SINCE.

1 ..... yesterday

2 ..... four weeks

3 ..... a year

4 1999

5 ..... last April

6 ..... two hours

4. WRITE THE CORRECT FORM OF THE VERBS.

USE PRESENT PERFECT, PAST SIMPLE OR GOING TO

1 I ..... (fly) to Paris twice.

2 I ..... (visit) my aunt last year.

3 My dad ..... (never/eat) Chinese food.

4 We ..... (visit) our grandparents next week.

5 Kate and Tom ..... (not/buy) mobile phones yet.

5. READ THE TEXT AND MATCH (A-E TO 1-4)

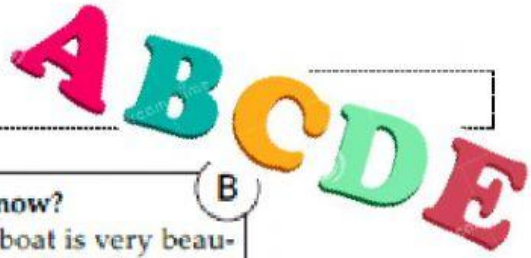

A

Hi,
I'm Rudi and I'm on holiday with my family in Alaska. We're staying on a houseboat and it's fantastic. I've been here for five nights and it's very comfortable.
Take care, Sara

B

Did you know?
The houseboat is very beautiful and practical. There are three bedrooms, a kitchen and a bathroom. The houseboat is 12 metres long and there's enough room for all of us.

C

Hi Sam,
We went to the national park two days ago. It was a fantastic trip, and the weather was great too. How about you?
Love, Ann

D

Hi Marek,
We've been to a national park and today, we saw three bears. They were walking in the river. Tomorrow we're going to go canoeing up the river. We're going to have a picnic.
Love, Miłosz

E

Hi from Alaska,
Yesterday we went fishing and dad caught a big fish. We cooked it for dinner. In the evening we sometimes sit outside and look at the stars. This is a great holiday.
Take care, Ola

1
Do you know how many bedrooms the houseboat has?
Yes, I do. ☐

2
Do you know what they did yesterday?
Yes, I do. ☐

3
Do you know where they are staying?
Yes, I do. ☐
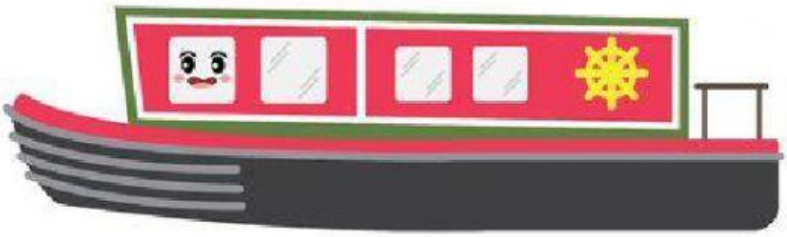
4
Do you know what they were doing in the national park?
Yes, I do. ☐