Asmaa Bint AlNou'maan Secondary Schoold

Grade 9 Advance

Drawing equipment

Set squares – Pencils – compass – Protractor – Engineers protractor

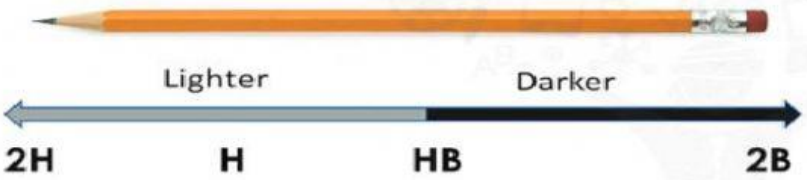

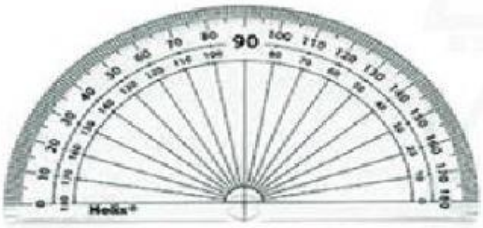

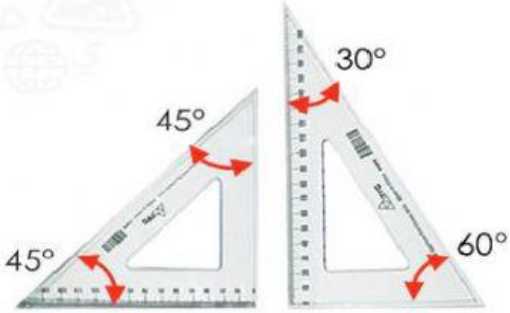

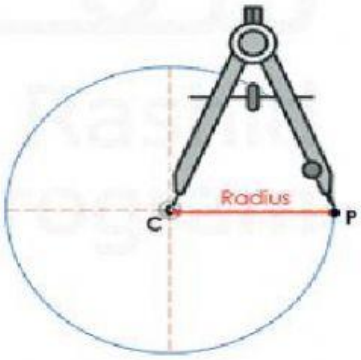

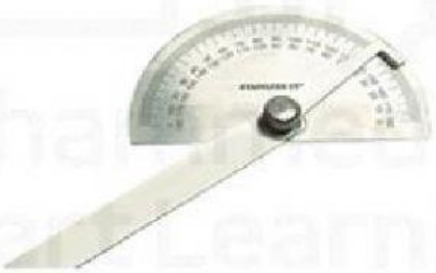

LIVEWORKSHEETS