Part 1: Find the shaded area of each of the figure below.

1)

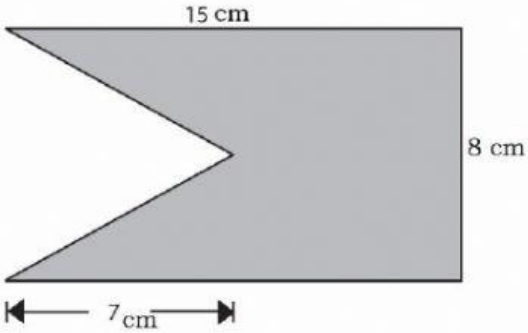

2)

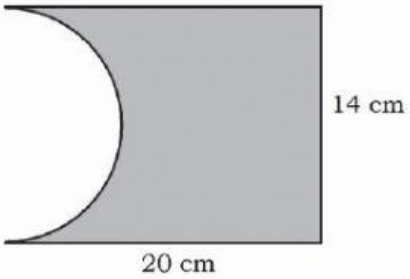

Area of triangle = _____ cm^2

Area of rectangle = _____ cm^2

Shaded area =

_____ – _____ = _____ cm^2

Area of semi circle = _____ cm^2

Area of rectangle = _____ cm^2

Shaded area =

_____ – _____ = _____ cm^2

LIVEWORKSHEETS

3)

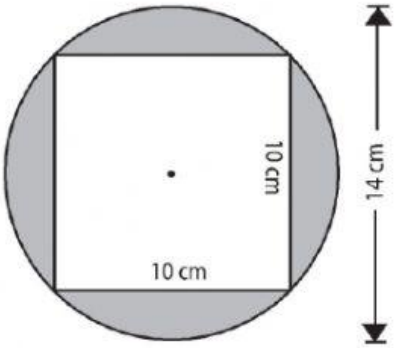

Area of square = _____ cm^2

Area of circle = _____ cm^2

Shaded area =

_____ – _____ = _____ cm^2

4)

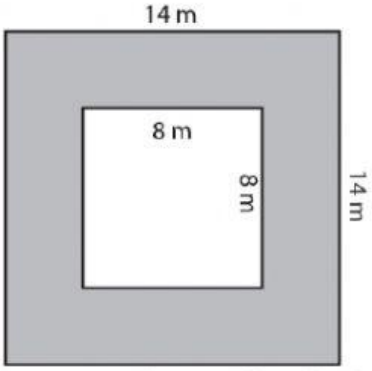

Area of small square = _____ cm^2

Area of big square = _____ cm^2

Shaded area =

_____ – _____ = _____ cm^2

pngtree.com

LIVEWORKSHEETS

Part 2: Find the perimeter and area of each of the figure below.

1)

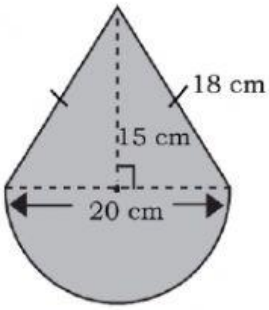

Perimeter = _____ cm

Area of triangle = _____ cm^2

Area of semi circle = _____ cm^2

Area of the figure =

_____ + _____ = _____ cm^2

2)

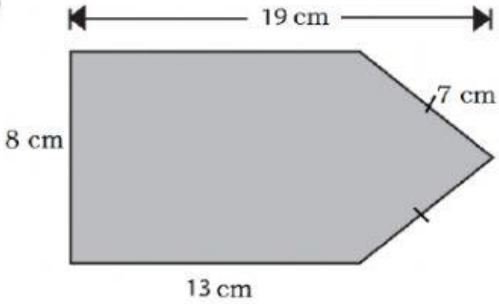

Perimeter = _____ cm

Area of rectangle = _____ cm^2

Area of triangle = _____ cm^2

Area of the figure =

_____ + _____ = _____ cm^2

LIVEWORKSHEETS