Road to PSR #5

1) Evaluate 175 639 + 64 288

2) Find the value of: $5^2 + \sqrt[3]{64}$

3) Write in numerals:

Five million, two hundred and thirty-one.

4) What is 405 less than 4005?

5) Express $11\frac{2}{5}$ as an improper fraction.

6) Given that g=3 and h=4 (Give the answer in 1 decimal place)

Find the value of $\frac{g^3+h}{h}$

7) Express 4 as percentage of 25.

%

LIVEWORKSHEETS

8) Calculate: 43 × 44

9) How many halves are there in 20.5?

10) Fill in the box with these symbols, <, >, =.

34.32 (  ) 30 tens + 4 Ones + 3 tenths + 2 hundredths

11) Express 1.02 kilometres (km) into metres.

m

12) Change 5.5 minutes to seconds.

seconds

13) Given that the volume of a cuboid below is $540cm^3$. Find the length of side marked J.

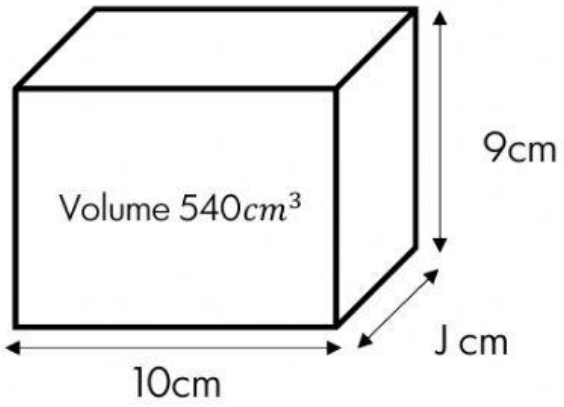


cm

LIVEWORKSHEETS

14) Find the perimeter of the figure below.

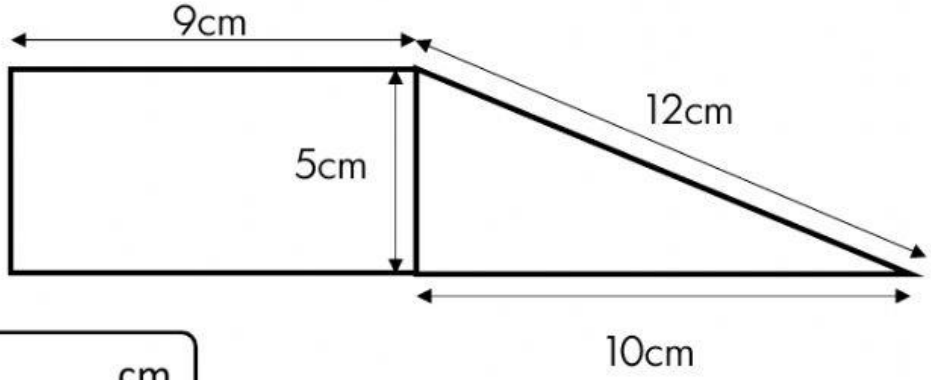


cm

15) The average weight of 3 men is 72 kg. What is their total weight?

kg

16) The figure shows a balance display the mass of a tin of milk. What is the total mass of 6 tins of milk? (Give your answer in kilograms).

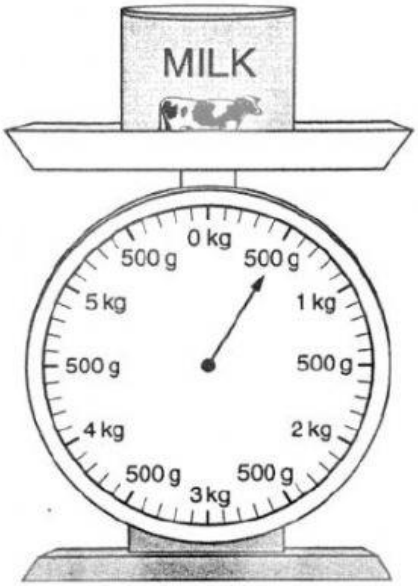


kg

LIVEWORKSHEETS

17) Hakim spent 45 minutes on his football practice. He started his practice at 4.53 pm. What time did he finish his practice?

pm

18) The average length of the sides of a quadrilateral plot of land is 8.2 m. What is it perimeter?

m

19) In the diagram below, Rectangle A has the same area as Triangle B. The base of the triangle is 6 cm and its height is 8 cm. What is the breadth of Rectangle A? Given that its length is 8 cm.

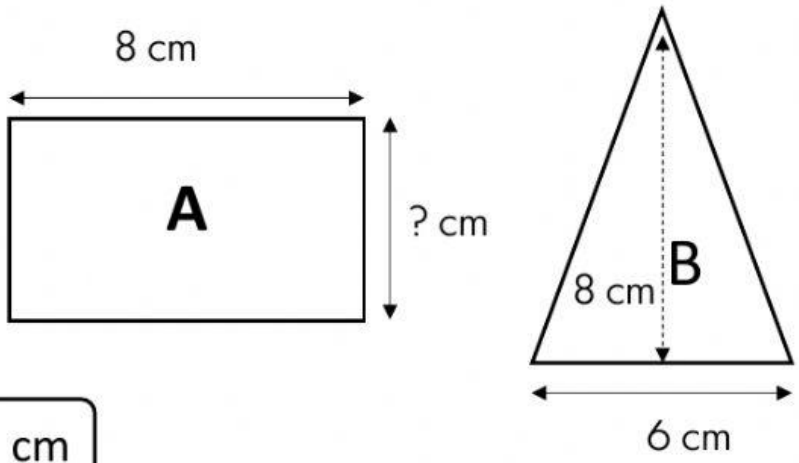


cm

20) Here is the rectangle with six identical shaded square inside it. The width of the rectangle is 4.2 cm.

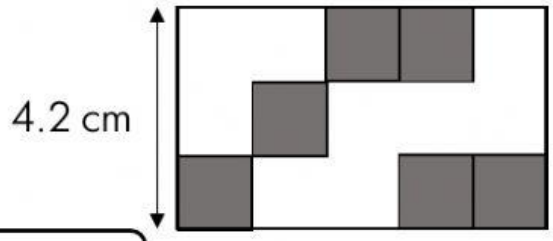


$cm^2$

LIVEWORKSHEETS