TOPIC 23.5.2 FRICTION &
TOPIC 23.5.2 ELASTIC DEFORMATION

✷ ***STEP 1: Click on the video below before answering the questions***

LIVEWORKSHEETS

✷ STEP 2: Answer the following questions

1. **Choose the most correct statement on the effect of force.**
   - **A.** Force can change the speed of an object but not its size
   - **B.** Force can change the shape of an object but not its size
   - **C.** Force can change the size of an object but not its shape
   - **D.** Force can change the size and shape of an object

ANSWER

2. **Choose the most accurate statement on describing friction.**
   - **A.** Friction is an opposing force that increases motion
   - **B.** Friction is an opposing force that may impede motion only
   - **C.** Friction is an opposing that may produce heat only
   - **D.** Friction is an opposing force that may impede motion and produce heat

ANSWER

3. **Friction is high when moving object on a rough surface, Thus when a force is applied to push the object across the rough surface the motion of the object will be slow.**
   - **A.** Not true
   - **B.** True
   - **C.** False
   - **D.** None of the above

ANSWER

4. **Which object will experience an elastic deformation?**
   - **A.** a car damaged in a collision
   - **B.** a football being kicked
   - **C.** a log hit by an axe
   - **D.** a target hit by an arrow

ANSWER

LIVEWORKSHEETS

5. The diagrams show the same spring with different weights attached

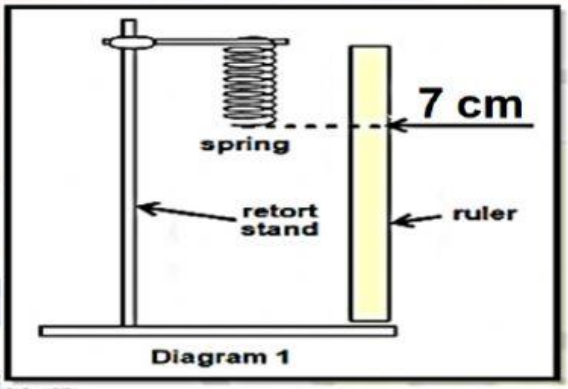

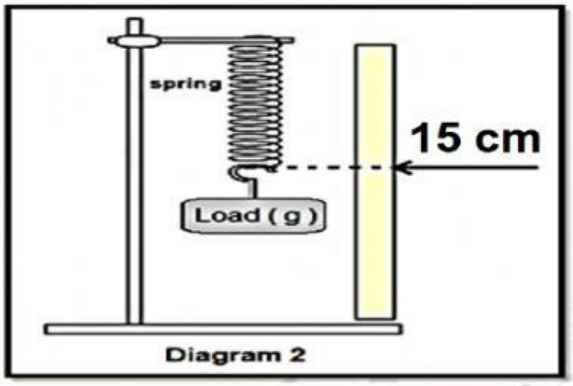

Calculate the extension of the spring

A. 7cm

B. 8cm

C. 9cm

D. 10cm

ANSWER

✹ **STEP 3:**

Click the button "FINISH" at the end of the paper after you have answered all the questions. Please type in your FULL NAME.

LIVEWORKSHEETS