WORKSHEET 1

Measure the area and the volume for the following shapes.

AREA = Length X Width

VOLUME = Length X Width X Height

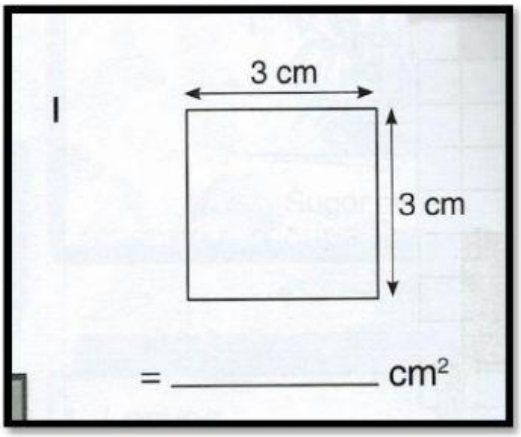

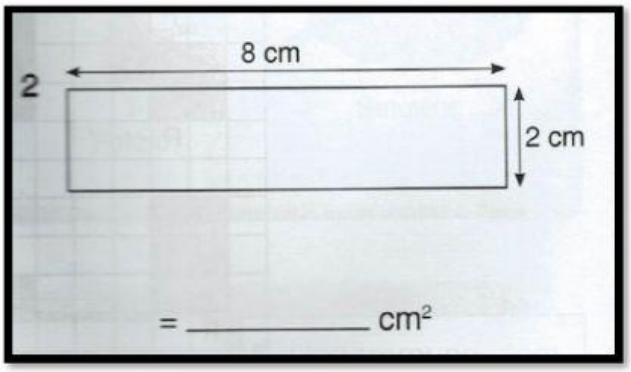

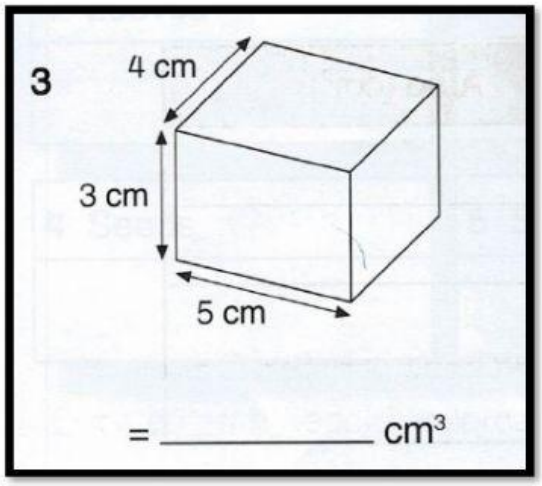

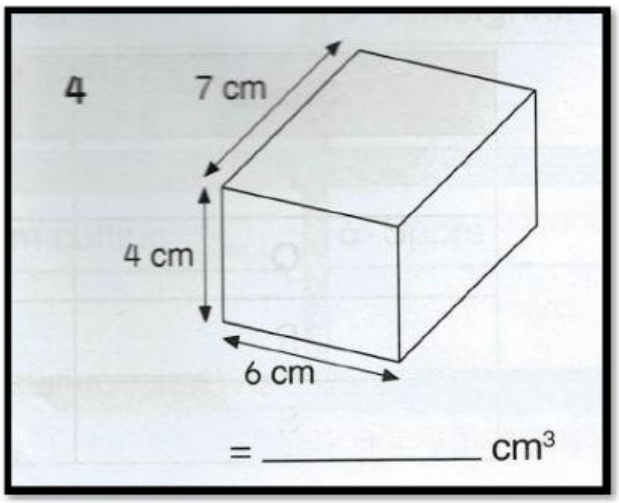

LIVEWORKSHEETS