The Differential Amplifier is used to calculate the difference between two input voltage values. Such as Temperature sensor output voltage and a setpoint. Then the output of the it could. Be used as level detector, simple calculator or in medical applications to find the difference in signals and amplify them.
This Worksheet provides evidence for PC1.6 and PC1.7.

PC1.6,7	Build a **differentia**l op-amp circuit using 741 IC to demonstrate its operation, and measure the output voltage using the multimeter for different inputs voltages. Compare the measured and calculated theoretical values.

Q1) Use MultiSim.com to simulate the differential Op-Amp circuit shown then perform the following steps.

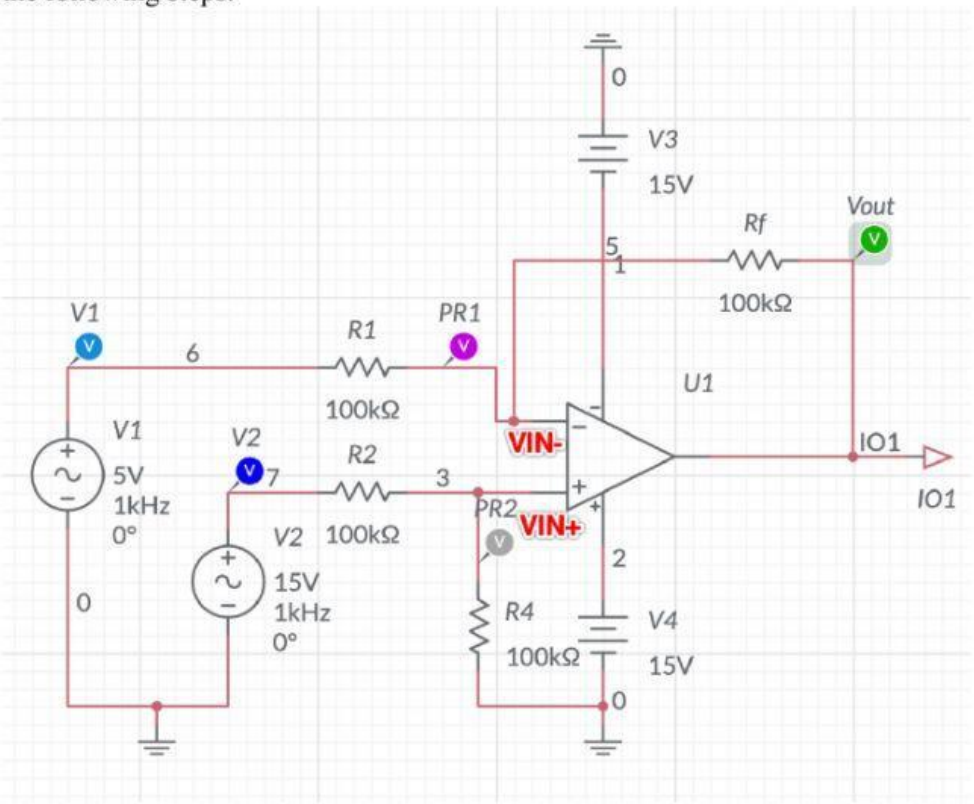

A. Copy and paste the link of your MultiSim circuit below.

B. Measure V_{IN+}, V_{IN-}, and Vo of the Op-Amp using the Simulator. Verify that the voltage gain A is R_f/R_1 and $V_{out} = R_f/R_1 (V_2 - V_1)$. Record all your data in the Table below.

Item V(Peak)	Calculated (V_{Pk})	Simulated (V_{Pk})	% Error
V_{IN+}			

LIVEWORKSHEETS

V_{IN-}			
V_1	5		
V_2	15		
V_{out}			
Gain (A)			

Hint: $V_{IN+} = V_{IN-}$, Calculate V_{IN+} using voltage divider rule.

c. Take screen shot of V_1 and V_2 then paste it below.

d. Take screen shot of V_{out} waveform then paste it below.

LIVEWORKSHEETS

Formulas:

- Voltage divider rule

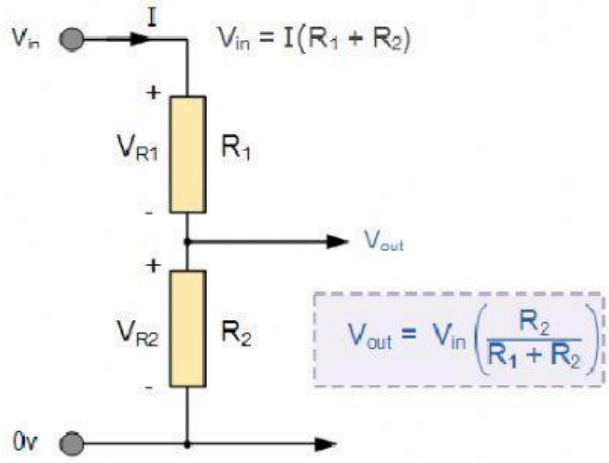

- % error formula

$$\% \text{ Error} = \left| \frac{\text{Theoretical Value} - \text{Experimental Value}}{\text{Theoretical Value}} \right| \times 100$$

Theoretical Value = Actual ... Known ...True Value

Theoretical value is also the calculated value.

LIVEWORKSHEETS