D.A.V. PUBLIC SCHOOL,PRATAP VIHAR

CLASS-FIRST

MATHS, TOPIC COMPARISON

Write 1 to 3 to show the order from biggest to smallest object

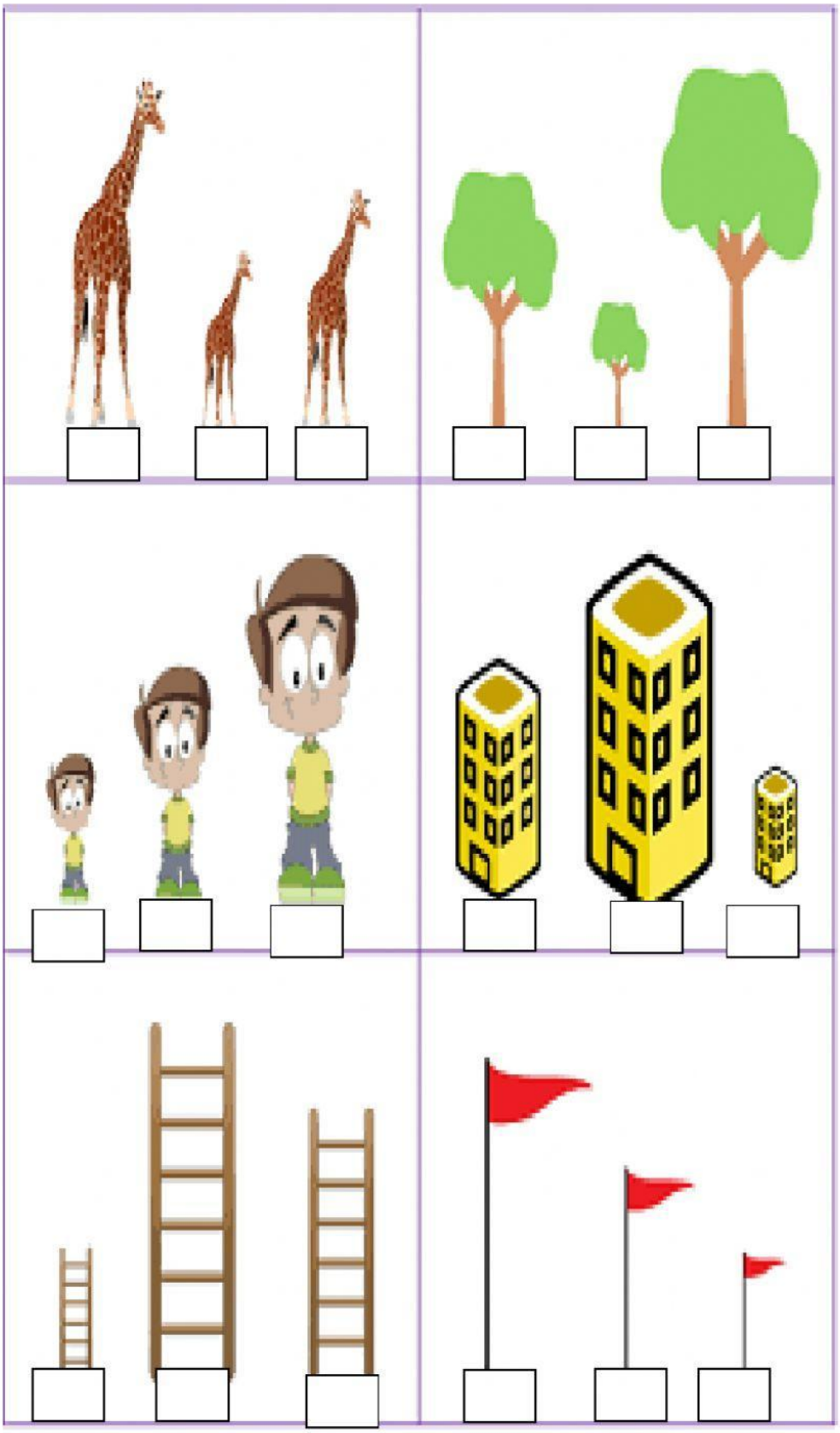

LIVEWORKSHEETS

Ordering Sizes

Write 1 to 3 to show the order from shortest to longest object.

1)

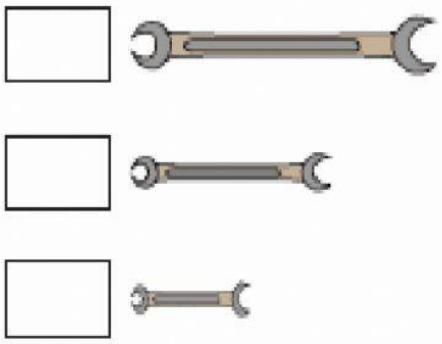

2)

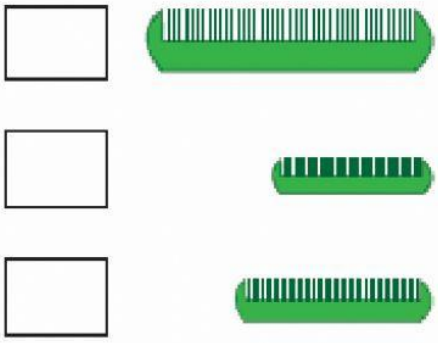

3)

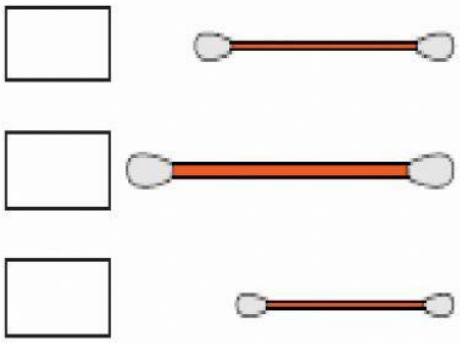

4)

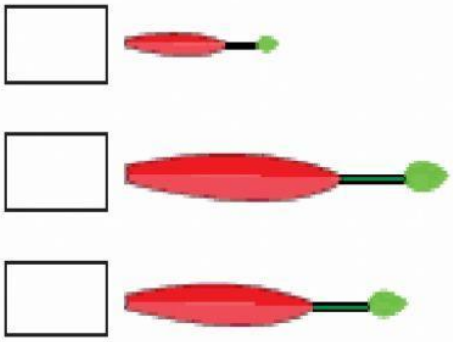

Write 1 to 3 to show the order from longest to shortest object.

5)

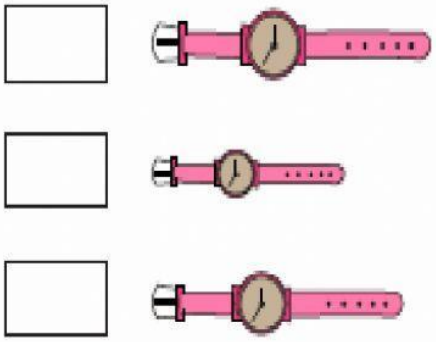

6)

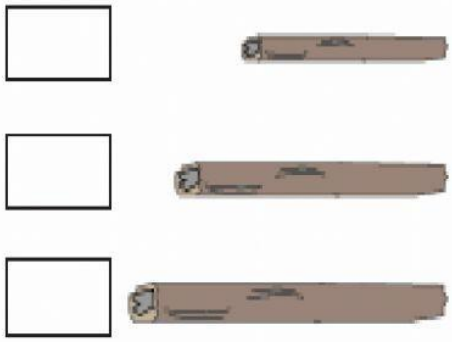

7)

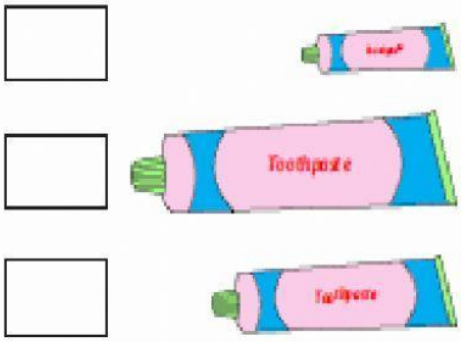

8)

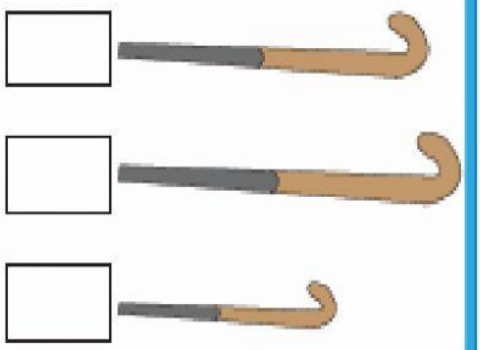

LIVEWORKSHEETS