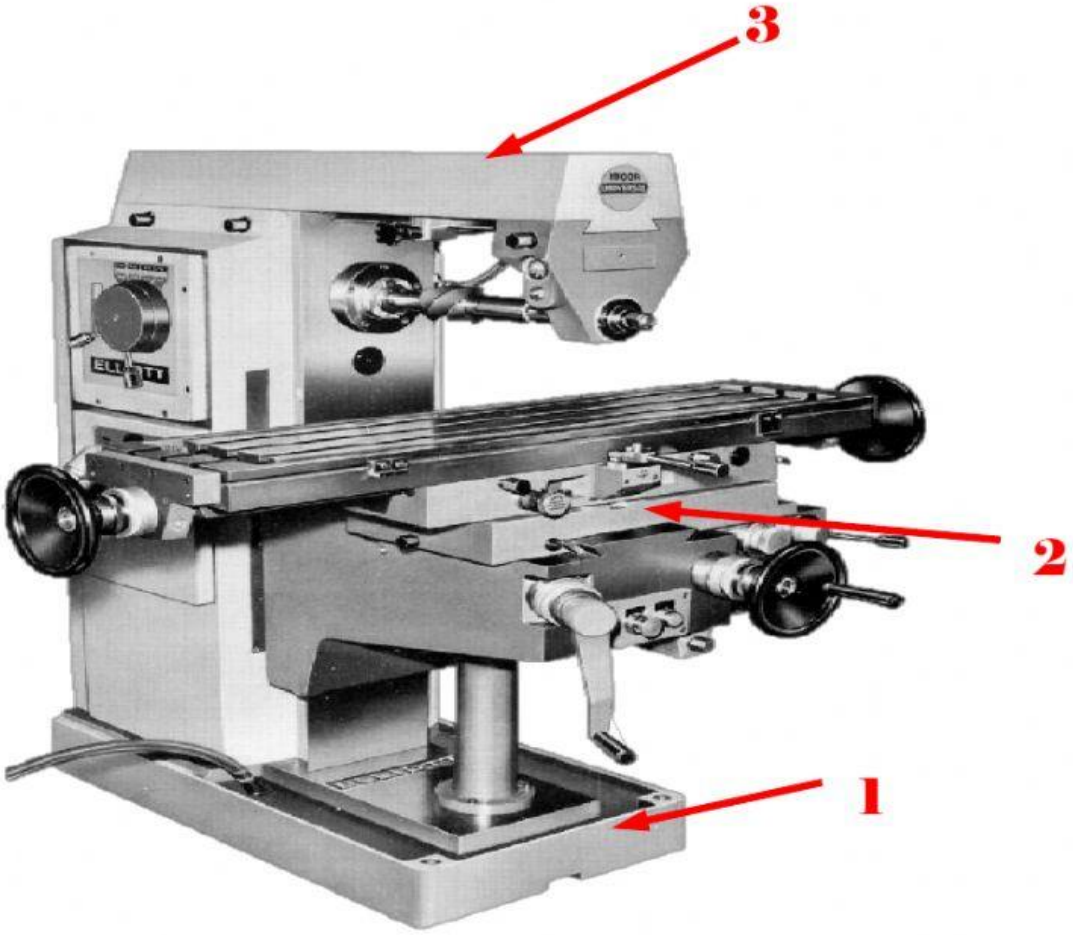

1

2

3

LIVEWORKSHEETS