Find the surface area of each solid figure:-

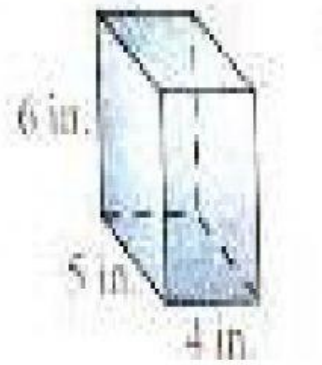

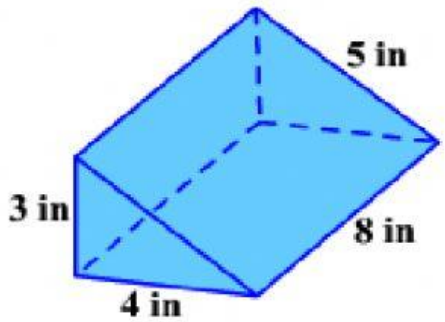

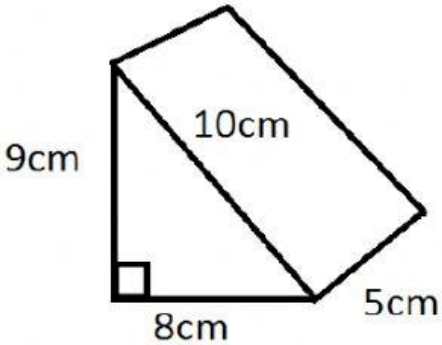

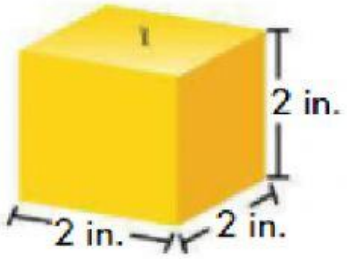

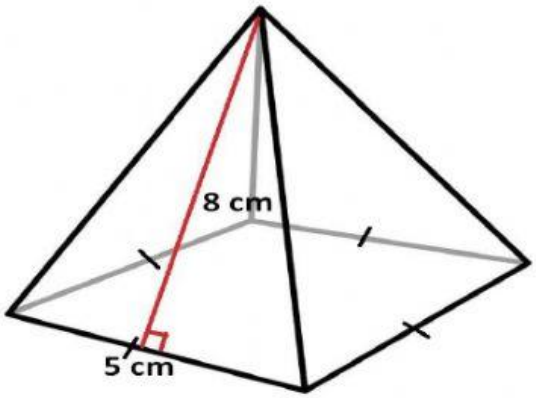

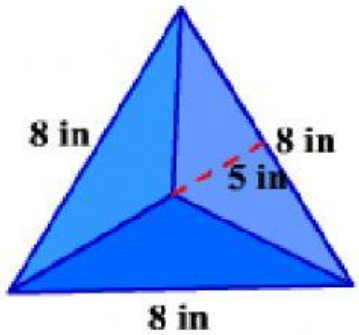

LIVEWORKSHEETS