Homework - Unit 3 - Lesson 8

Listening practice

6·1 What is job satisfaction?

1 **Average hours worked per week in UK**

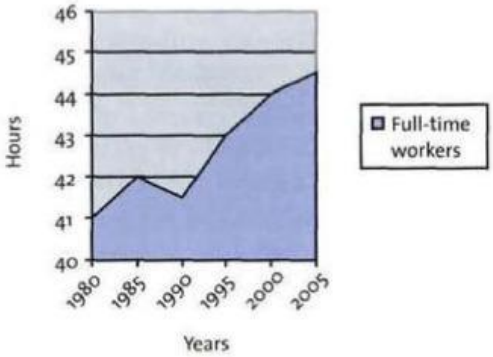

2 **UK employees inspired by their bosses**

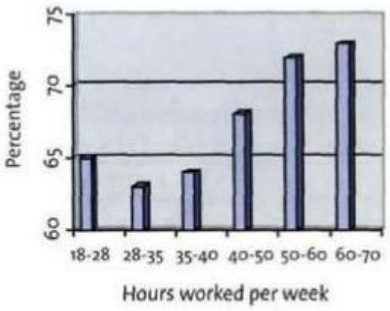

For example: 65% of people who work 18–28 hours per week feel inspired by their boss.

1 Talk about charts 1 and 2 above. What do the charts tell you about working life today?

2 What makes a good job? Rank the following 1 to 8, with 1 being the most motivating for you, and discuss your decisions with your partner.

- flexible working hours
- being part of a team
- an excellent salary
- good holidays
- promotion prospects
- staff facilities, e.g. a sports centre
- responsibility
- an inspirational boss

Listening

Test spot

Section 4 of the Listening Module is always a talk or short lecture related to academic work or study. There will be a mixture of task types and you will be told which questions to read, and be given time to read them, before you hear the recording.

3 You are going to hear a woman giving a lecture to a group of business students on the subject of motivation at work. In the test the recording may pause, but it won't be stopped. For this exercise, however, you should stop after each group of questions so you can look carefully at the next set of questions before you listen to the next part of the recording.

The questions are in the order in which you will hear the answers in the recording. Write **NO MORE THAN TWO WORDS AND / OR A NUMBER** for each answer.

AUDIO ***Questions 1 and 2***

Complete the diagram below.

Motivation model

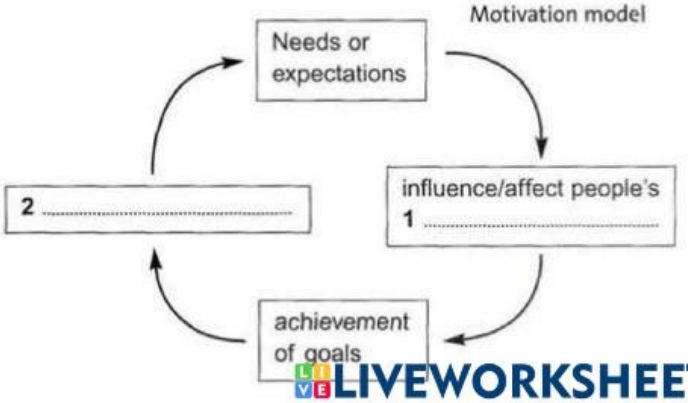

LIVEWORKSHEETS

AUDIO **Questions 3–5**

Complete the sentences below.

Taylor wrote his theory in the **3** ..... century.
Taylor's theory was that people only worked for **4** ..... .
Later research concluded that some people preferred to work **5** ..... .

AUDIO **Questions 6 and 7**

Complete the diagram below.

Look carefully at the diagram and check you understand where to write your first answer.

Maslow's theory

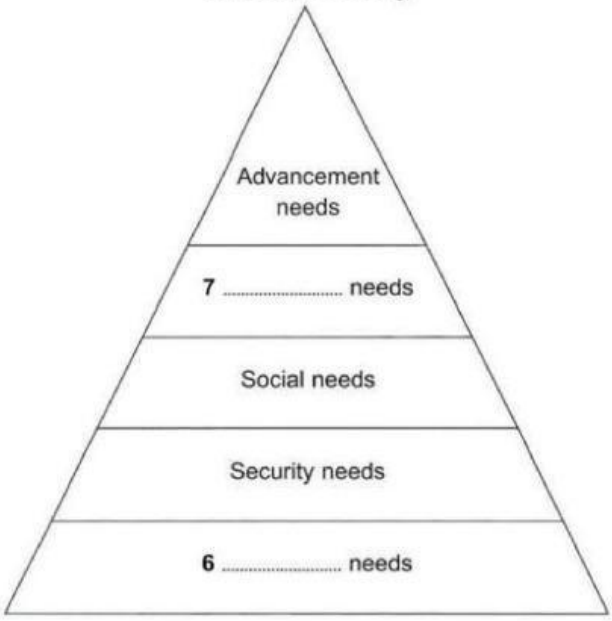

AUDIO **Questions 8 and 9**

Complete the table below.

Look at the table and notice that in this section you need to listen for percentages.

Source of job satisfaction	% of employees
Inspirational leader	72%
Type of work	**8** .....
Good pay	50%
Flexible working hours	**9** .....

AUDIO **Question 10**

*Choose the correct letter, **A–D**.*
What does the speaker say about workers in the UK?

A They want to have a good lifestyle.
B Socialising at work is not a priority for them.
C They want to earn a lot of money.
D Having a job title is a priority for them.

LIVEWORKSHEETS

Listening

5 You will hear three students giving a presentation about monorails. Have you seen or travelled on a monorail? What do you know about them?

AUDIO 6 Before you listen to the first part of the recording, look at the sentences, and think about what kind of information you need to listen for. Then answer the questions as you listen.

Questions 1–4

Complete the sentences.

Write ***NO MORE THAN TWO WORDS AND/OR A NUMBER*** *for each answer.*

What is a monorail?

Tracks are usually **1** ..... .

Most monorails are used for transporting

2 ..... .

The oldest monorail still in use opened in the year

3 ..... .

Shanghai monorail trains normally reach a speed of

4 ..... kilometres an hour.

LIVEWORKSHEETS

Now read and think about these notes as you did above. Then answer the questions as you listen.

Questions 5–9 AUDIO

Complete the notes.

*Write **NO MORE THAN TWO WORDS** for each answer.*

Safety:
- very rarely derailed
- no risk of **5** .....

Environment:
- produce relatively little **6** .....
- stations can be in **7** ..... and other busy places

Economics:
- only installation takes place on site
- low operating costs
- very **8** ..... compared with other forms of transport

Disadvantage:
- they use a **9** .....

Before listening to the third part of the recording, look at the diagram opposite, and for each number, write the appropriate word from the box. Use a dictionary if necessary. This will help you here, but note that in the test it normally isn't possible to label the diagram without listening to the recording.

balcony	beam	operating unit	pillar
vehicle	walkway		

10 .....
11 .....
12 .....
13 .....
14 .....

Now listen to the third part of the recording, and check your answers. You will hear them in the order of the questions. In some cases, the word in the recording is different from the one in the box, but has a similar meaning. This is often the case in the Listening Module. Beside your answers above, write the words that you hear.

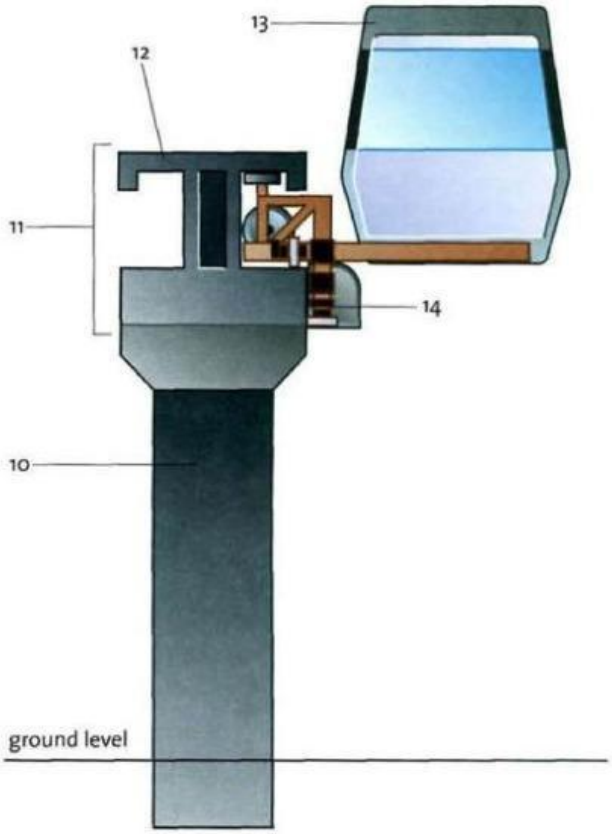

LIVEWORKSHEETS