My picture dictionary

1 one	2 two	3 three
4 four	5 five	6 six

My star card

Can you say these words?

2	4	7	3	6	9
☆	☆	☆	☆	☆	☆

Colour the stars.

LIVEWORKSHEETS

2 My school

1 Listen and colour.

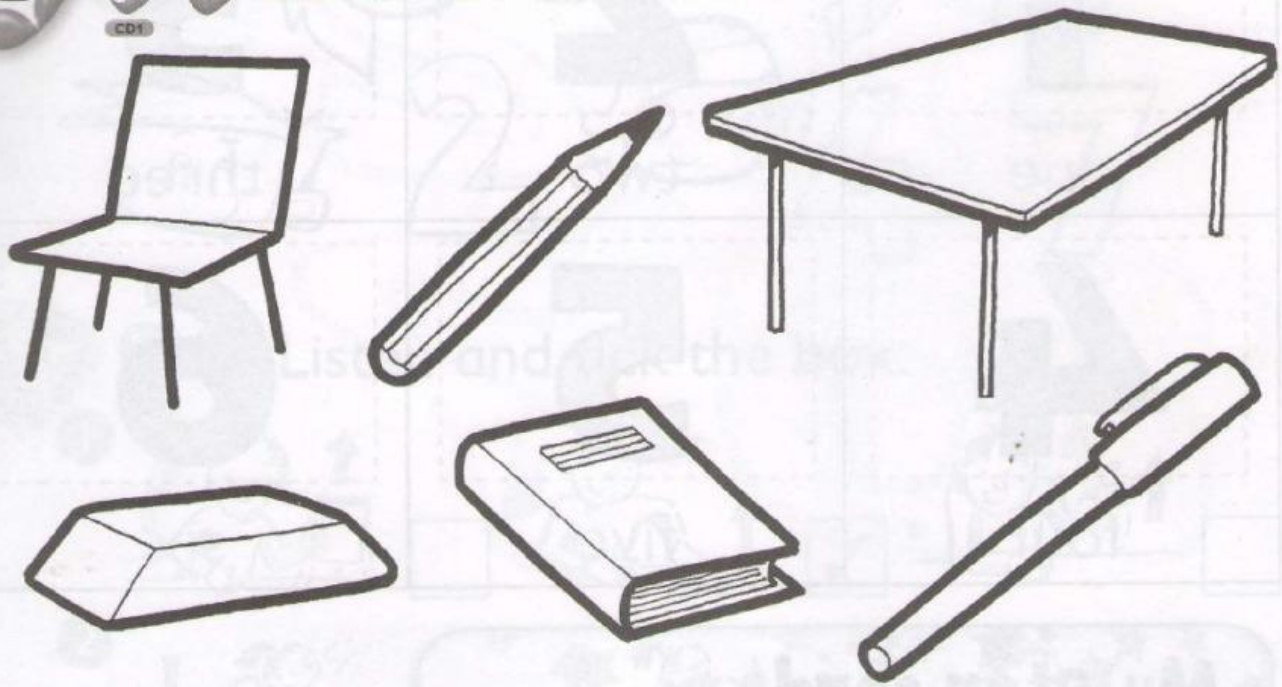

2 Count. Write the number.

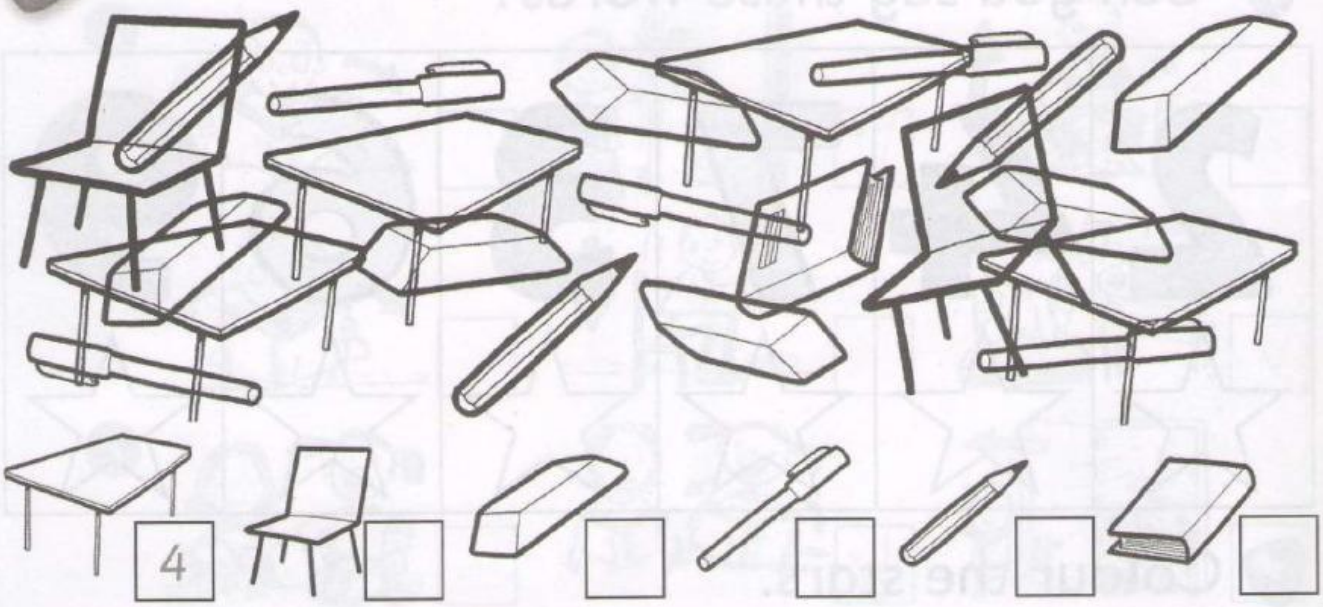

LIVEWORKSHEETS

3 Draw the pictures.

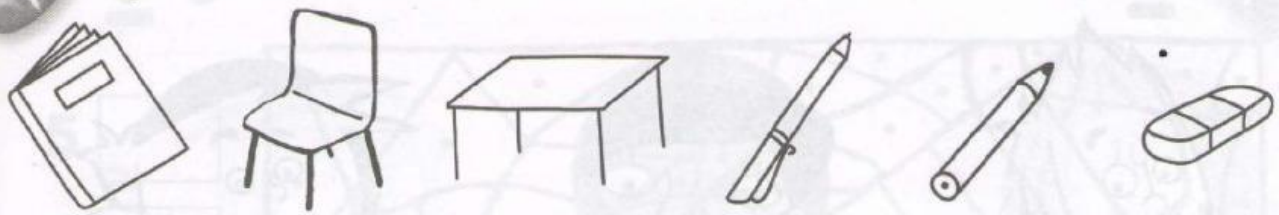

1	2	3
4	5	6

Now tell your friend. Draw your friend's pictures.

Number 1 is a chair.

1	2	3
4	5	6

LIVEWORKSHEETS

My picture dictionary

pen	pencil	table
chair	eraser	book

My star card

Can you say these words?

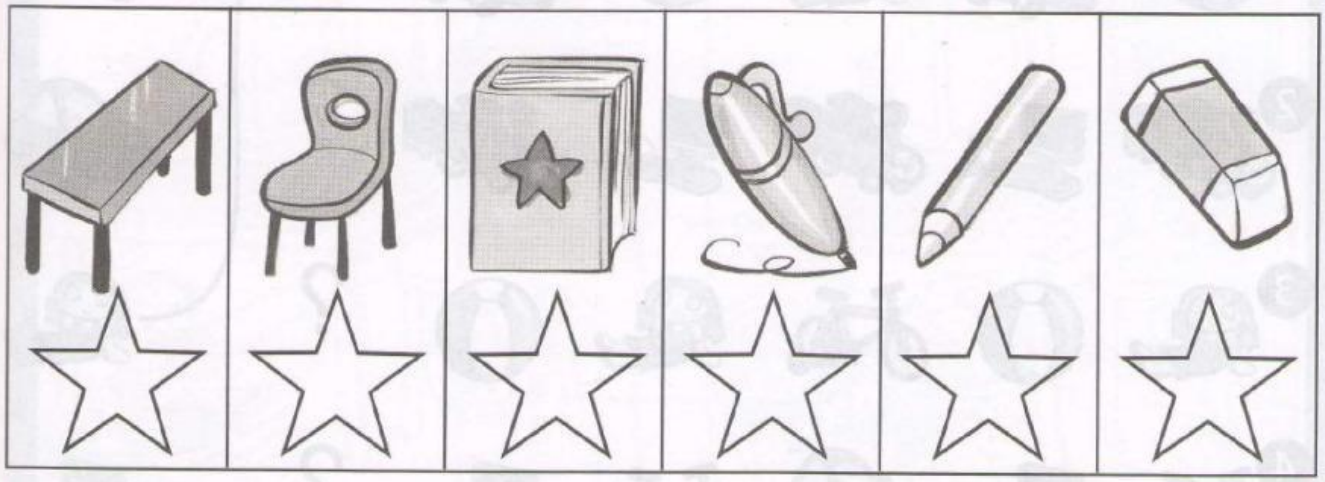

Colour the stars.

LIVEWORKSHEETS

3 Favourite toys

1 Listen and circle the tick or cross.

1 ✓ ✗

2 ✓ ✗

3 ✓ ✗

4 ✓ ✗

5 ✓ ✗

6 ✓ ✗

2 Look and complete.

1 ?

2 ?

3 ?

4 ?

LIVEWORKSHEETS

3 What colour? Listen and draw lines.

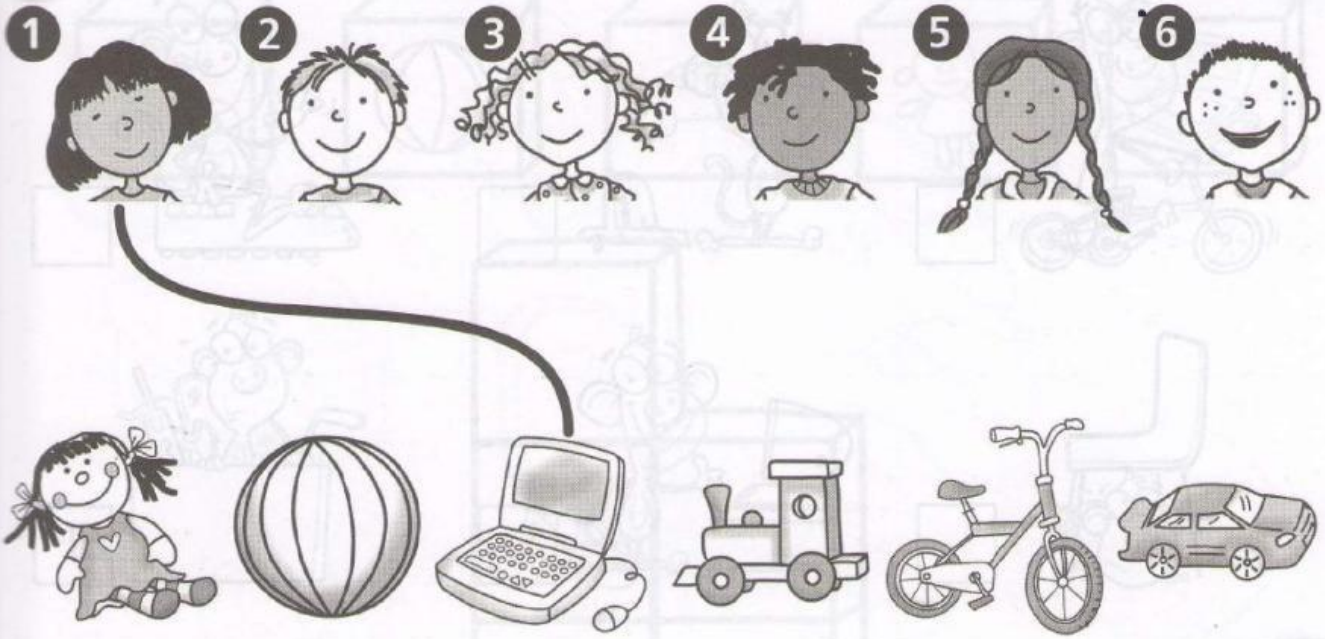

4 Draw your favourite toy.

I'm a star!

LIVEWORKSHEETS