Nama:

Hitunglah keliling bangun datar gabungan berikut!

1.

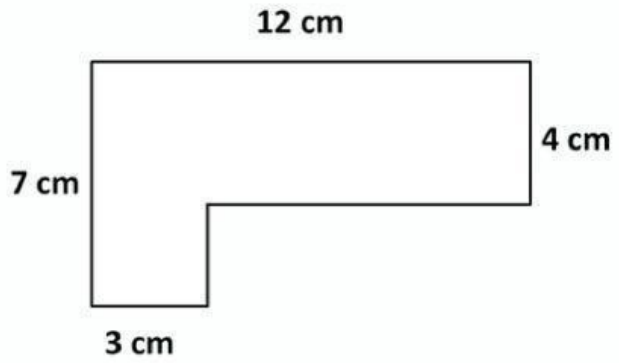

Keliling = + + + + +

=

2.

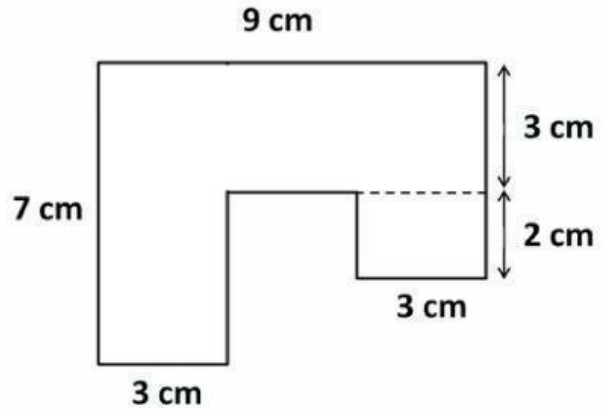

Keliling = + + + + + + + +

=

3.

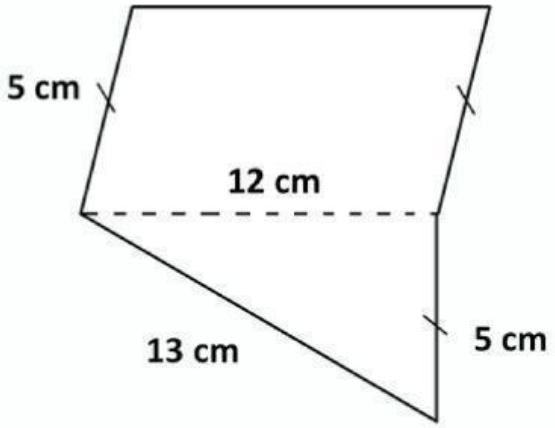

Keliling = + + + +

=

LIVEWORKSHEETS

4.

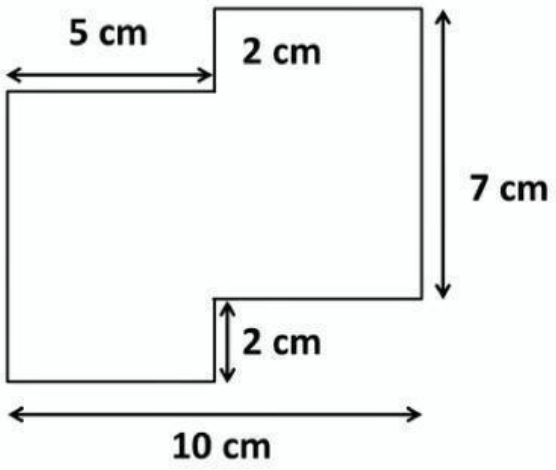

Keliling = + + + + + + +

=

5.

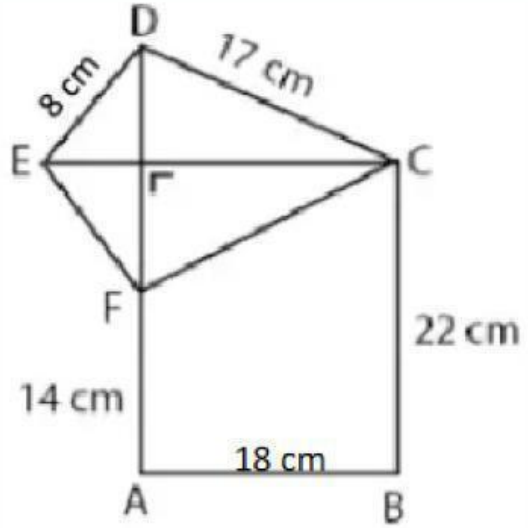

Keliling = + + + + +

=

LIVEWORKSHEETS