Volume and Surface Area of Composite Figures

1. **Example 1** Volume of Composite Figures

A toy block has the dimensions shown.

What is the volume of the block? Round to the nearest hundredth if necessary.

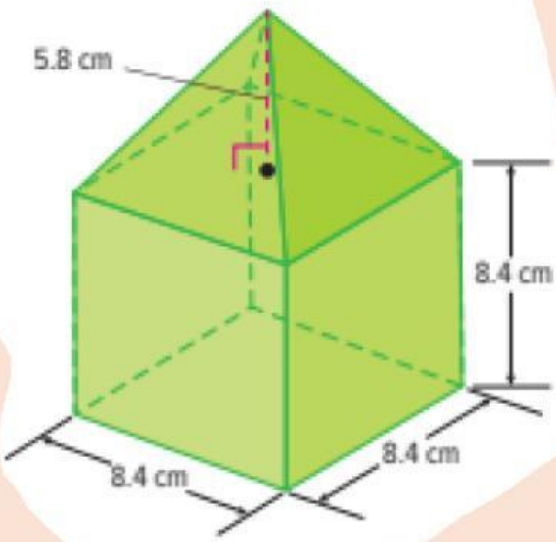

Volume of the pyramid = cm^3

Volume of the cube = cm^3

Volume of the toy block = + = cm^3

2. What is the volume of the composite figure? Round to the nearest hundredth if necessary.

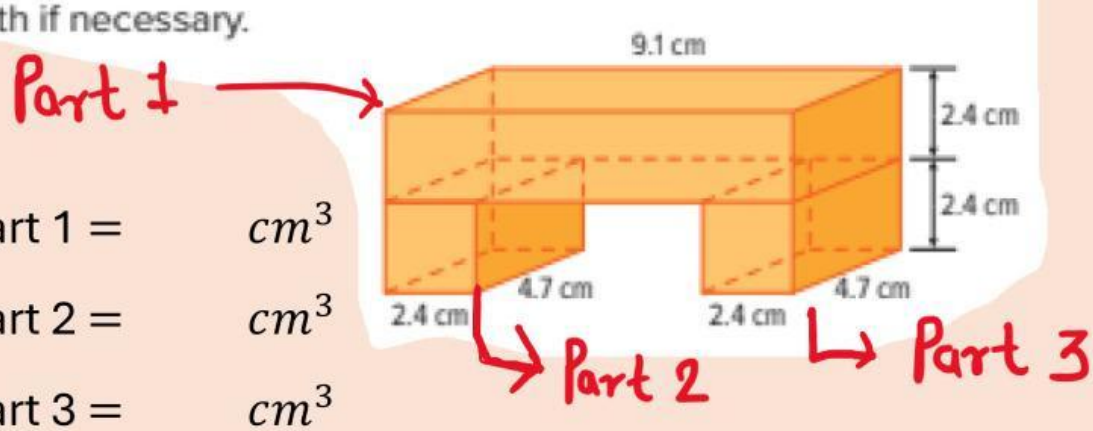

Volume of part 1 = cm^3

Volume of part 2 = cm^3

Volume of part 3 = cm^3

Volume of the composite figure = + + = cm^3

LIVEWORKSHEETS

3. Mya's lunchbox is shown. What is the volume of the lunchbox? Round to the nearest tenth if necessary.

Part 1 →

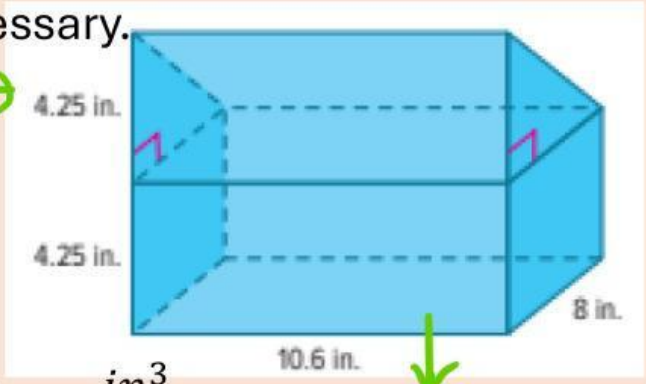

↓ Part 2

Volume of part 1 = in^3

Volume of part 2 = in^3

Volume of the lunch box = + = in^3

4. Anson's toy rocket is shown. What is the volume of the rocket? Round to the nearest tenth if necessary.

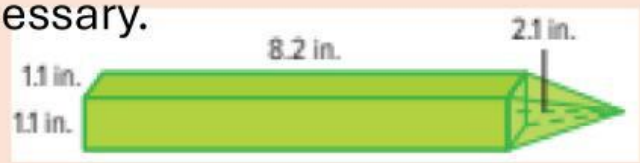

Volume of the pyramid = in^3

Volume of the cuboid = in^3

Volume of the toy rocket = + = in^3

5. What is the volume of the birdfeeder? Round to the nearest tenth if necessary.

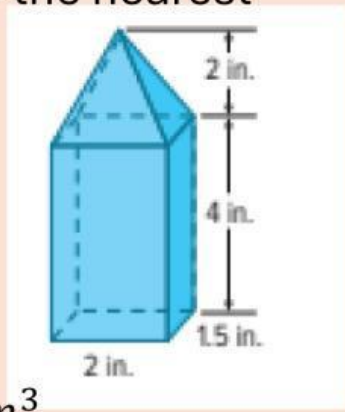

Volume of the pyramid = in^3

Volume of the cuboid = in^3

Volume of the birdfeeder= + = in^3

LIVEWORKSHEETS

6. Zahir made this wooden perch for his pet bird. What is the volume of the bird perch? Round to the nearest tenth if necessary.

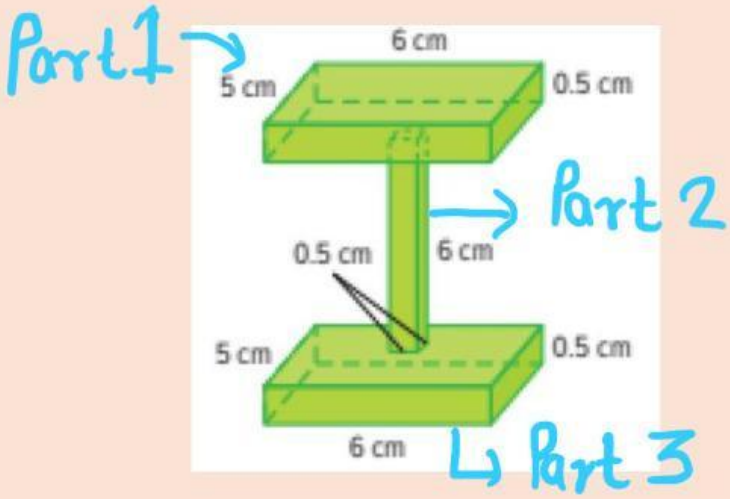

Volume of part 1 = cm^3

Volume of part 2 = cm^3

Volume of part 3= cm^3

Volume of the bird perch= + + = cm^3

LIVEWORKSHEETS