INSPIRED TOTS EARLY LEARNING CENTER

FIRST TERM CONTINUOUS ASSESSMENT, 2024.

NAME:_____ **DATE:**_____

QUANTITATIVE REASONING *2ND GRADE.*

Arrange the following numbers in an ascending order.

(1) 4,650 5,650 1,650 3,650 6,650 2,650

(2) 2,113 2,311 2,131 1223 3,211 1,332

Arrange the following numbers in a descending order.

(3) 302 365 389 301 297 198

(4) 9989 9562 9677 6541 7231 6281

LIVEWORKSHEETS

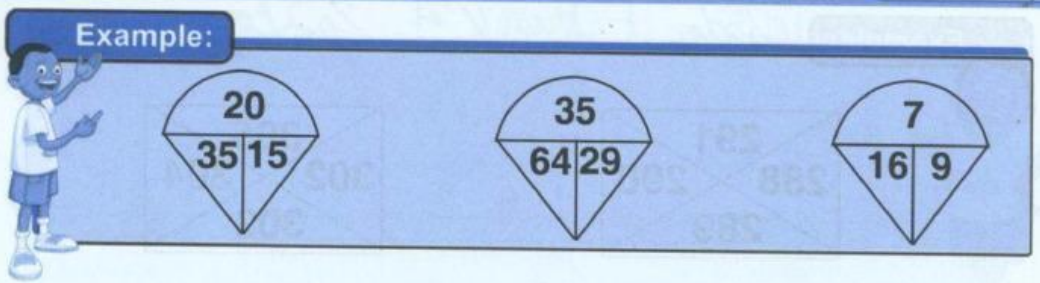

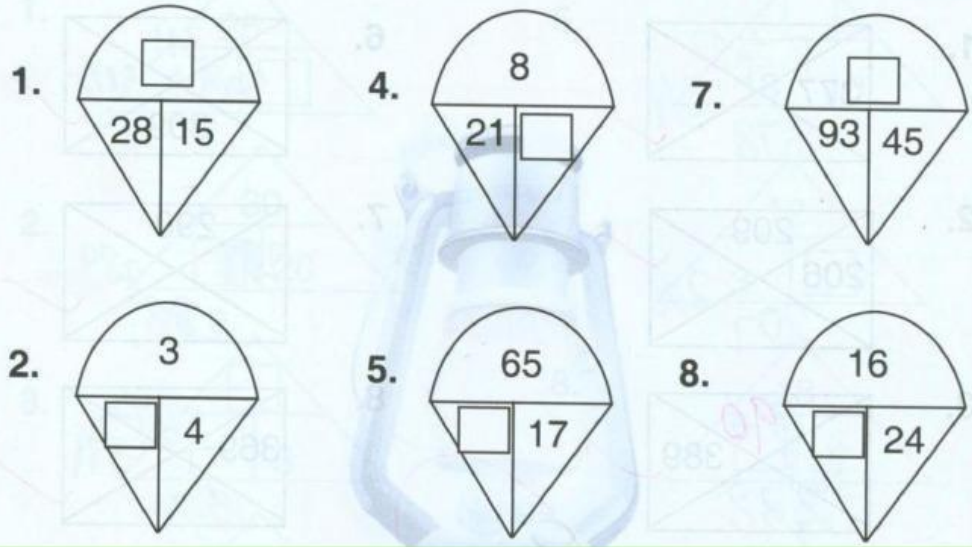

LIVEWORKSHEETS

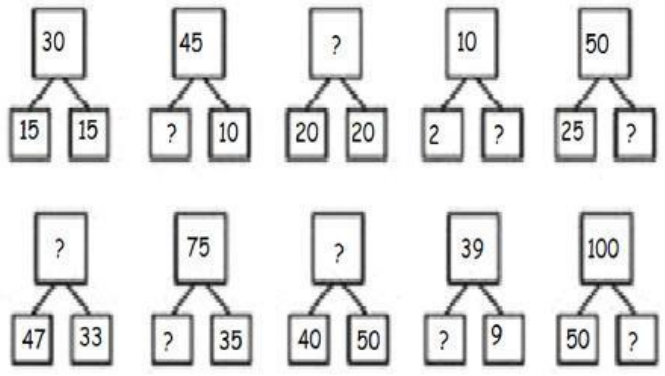

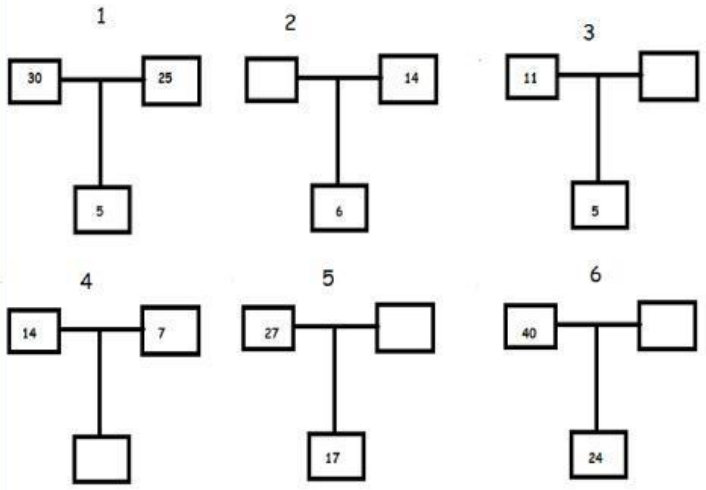

LIVEWORKSHEETS

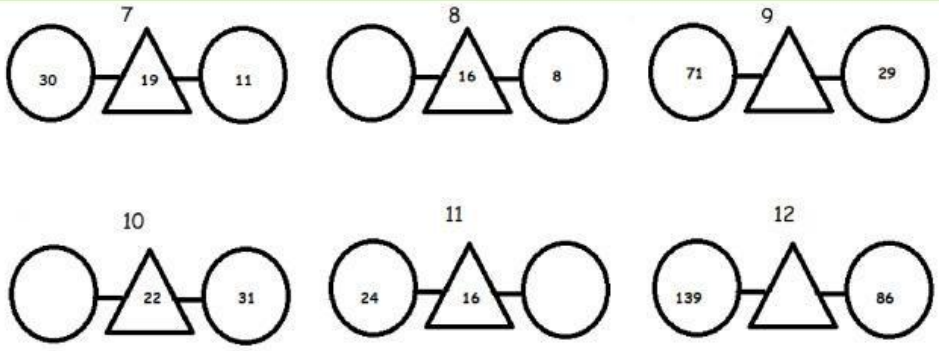

LIVEWORKSHEETS