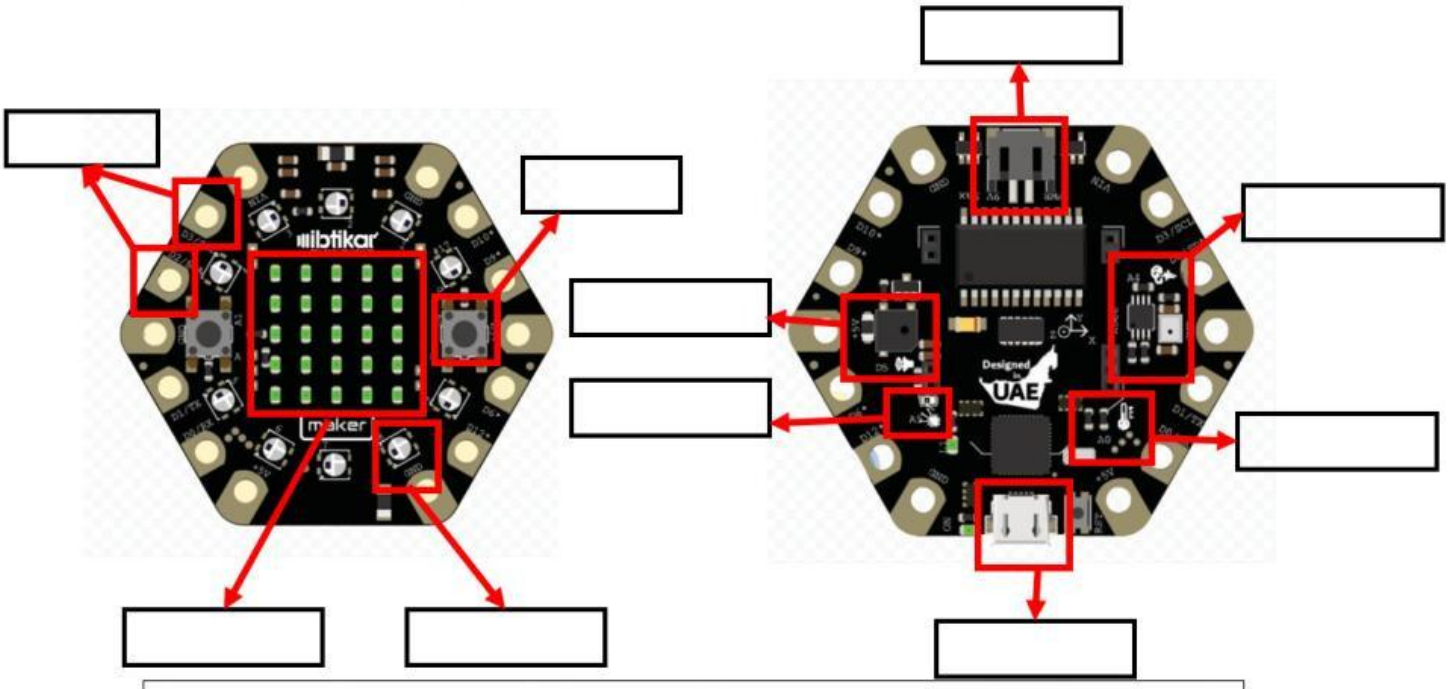

Push Button | Light Sensor | Neo pixel | Temperature sensor | Pin pads

Buzzer | LED Grid | Micro-USB Socket | Battery connector | Sound sensor

LIVEWORKSHEETS