0 1 A student makes the circuit shown in **Figure 1**. The student wants to measure the current and the potential difference in the circuit.

Figure 1

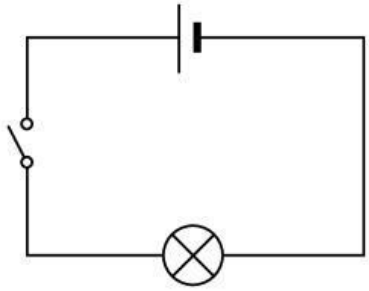

0 1 . 1 Draw a component on **Figure 1** that would allow the student to measure the potential difference across the bulb.

[2 marks]

0 1 . 2 Write down the equation that links current, potential different and resistance.

[1 mark]

_____

0 1 . 3 The current in the circuit is 6A. The potential difference across the bulb is 12V.

Calculate the resistance of the bulb. Give the unit.

[3 marks]

_____

_____

_____

resistance = _____ unit _____

0 1 . 4 Suggest how the brightness of the bulb in **Figure 1** could be increased.

[1 mark]

_____

_____

7

LIVEWORKSHEETS

0 2 **Figure 2** shows two circuits, each containing two bulbs.

Figure 2

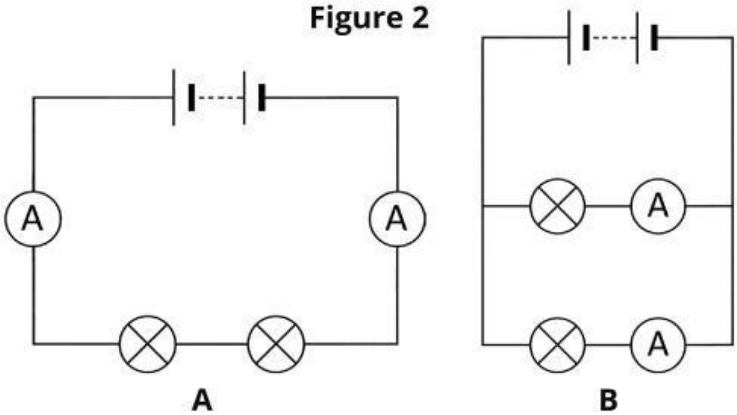

0 2 . 1 Name the two types of circuit shown in **Figure 2**.

[2 marks]

A _____

B _____

0 2 . 2 Name the component that is used to measure current.

[1 mark]

_____

0 2 . 3 Compare the current and potential difference across the bulbs in the two circuits in **Figure 2**.

[4 marks]

_____

_____

_____

_____

_____

_____

_____

_____

_____

_____

7

LIVEWORKSHEETS

0 3 A student rubbed a balloon against their hair and observed what happened. The outcome is shown in **Figure 3**.

Figure 3

0 3 . 1 Name the force that exists between the balloon and the student's hair.

[1 mark]

_____

0 3 . 2 The student's hair became positively charged.

Explain how the student's hair became positively charged. You should refer to the transfer of electrons in your answer.

[3 marks]

_____

_____

_____

0 3 . 3 Explain why the student's hair stuck to the balloon.

[2 marks]

_____

_____

_____

6

LIVEWORKSHEETS

0 4 A student investigated how the strength of an electromagnet is affected by the current through the electromagnet.

The equipment they used is shown in **Figure 4**.

Figure 4

0 4 . 1 Describe how the student used the equipment in **Figure 4** to make an electromagnet.

[3 marks]

0 4 . 2 When the electromagnet was switched on, paperclips were attracted to the electromagnet.

Explain why the paperclips were attracted to the electromagnet.

[1 mark]

LIVEWORKSHEETS

0 4 . 3 The student counted how many paperclips were attracted to the electromagnet.

Their results are shown in **Table 1**.

Table 1

Current (A)	Number of Paperclips Attracted
0	0
1	6
2	12
3	17
4	25
5	30

Use the results in **Table 1** to complete **Figure 5**.

- Complete the scale on the y-axis.
- Plot the data on the graph.
- Draw a line of best fit.

[4 marks]

Figure 5

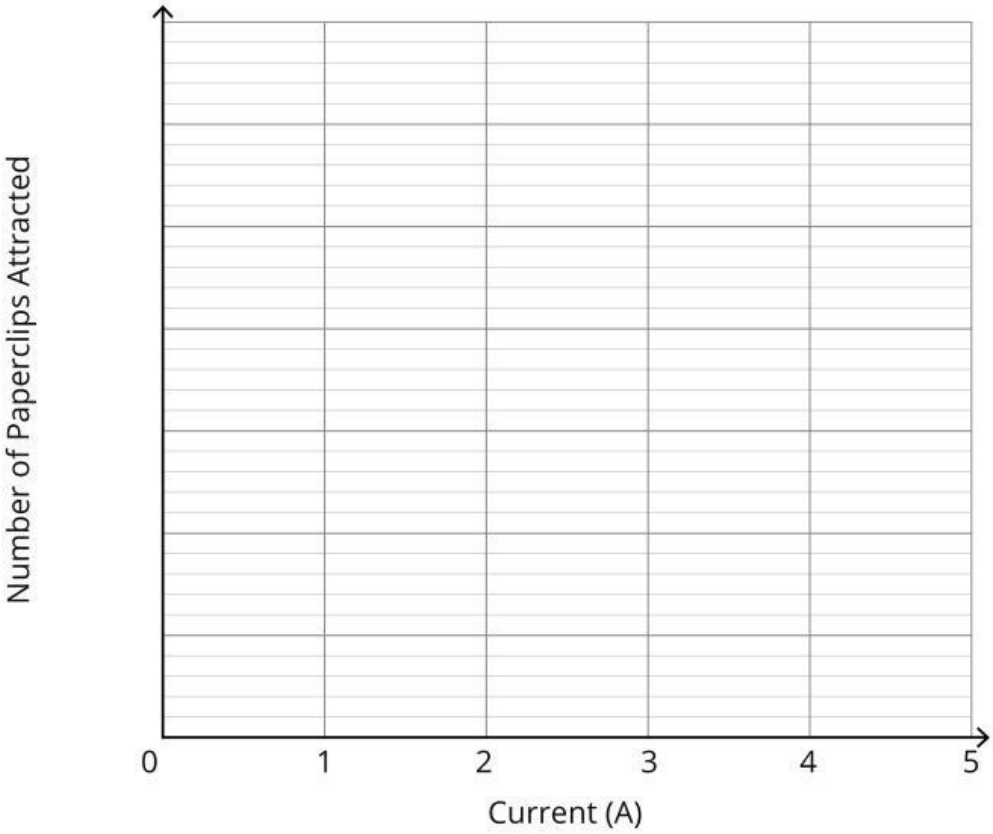

LIVEWORKSHEETS

0 4 . 4 Describe how changing the current affects the strength of the electromagnet.

[1 mark]

0 4 . 5 Electromagnets are often used to lift scrap metal in scrapyards as shown in **Figure 6**.

Figure 6

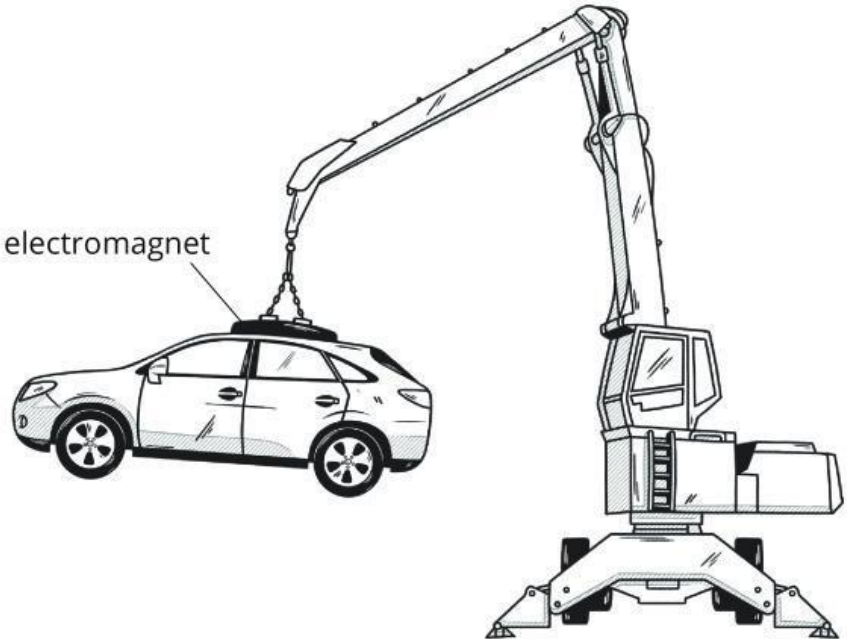

Give **one** advantage of using an electromagnet instead of a permanent magnet in a scrapyard.

[1 mark]

10

LIVEWORKSHEETS