National Teachers College
629 J. Nepomuceno Street, Quiapo, Manila

ENGLISH

Name: _____ **Remarks:** _____
Kindergarten: _____ **Date:** _____

A. Color all the Big Letters T **Green.** Color all Small Letters t **red.**

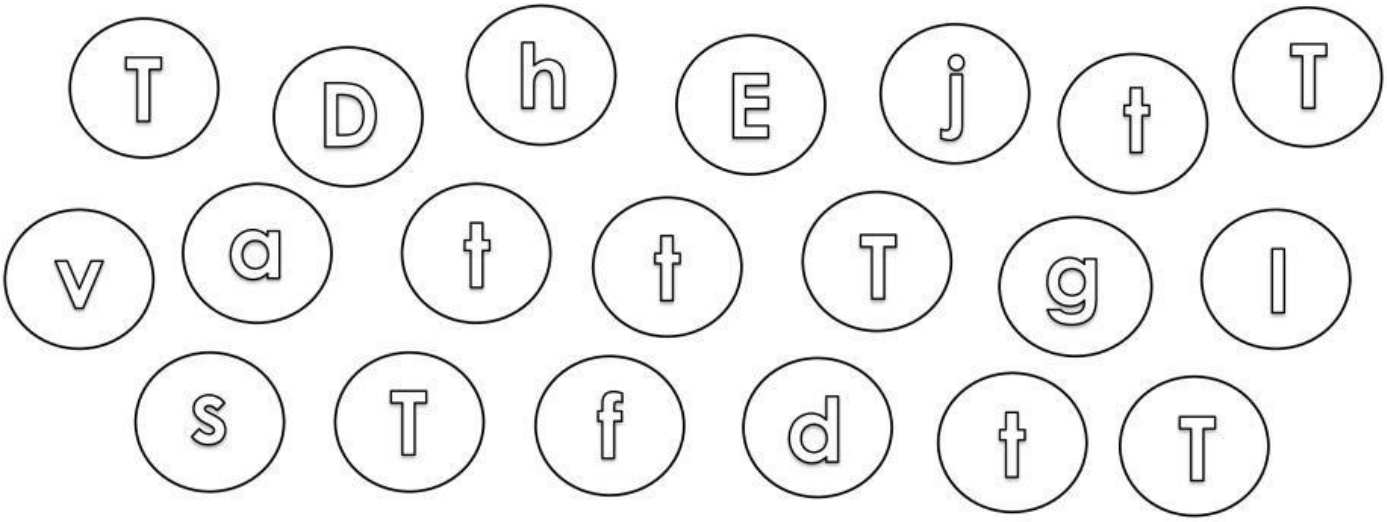

B. Help small letter t find its way to the **exit of the maze** to meet big letter T.

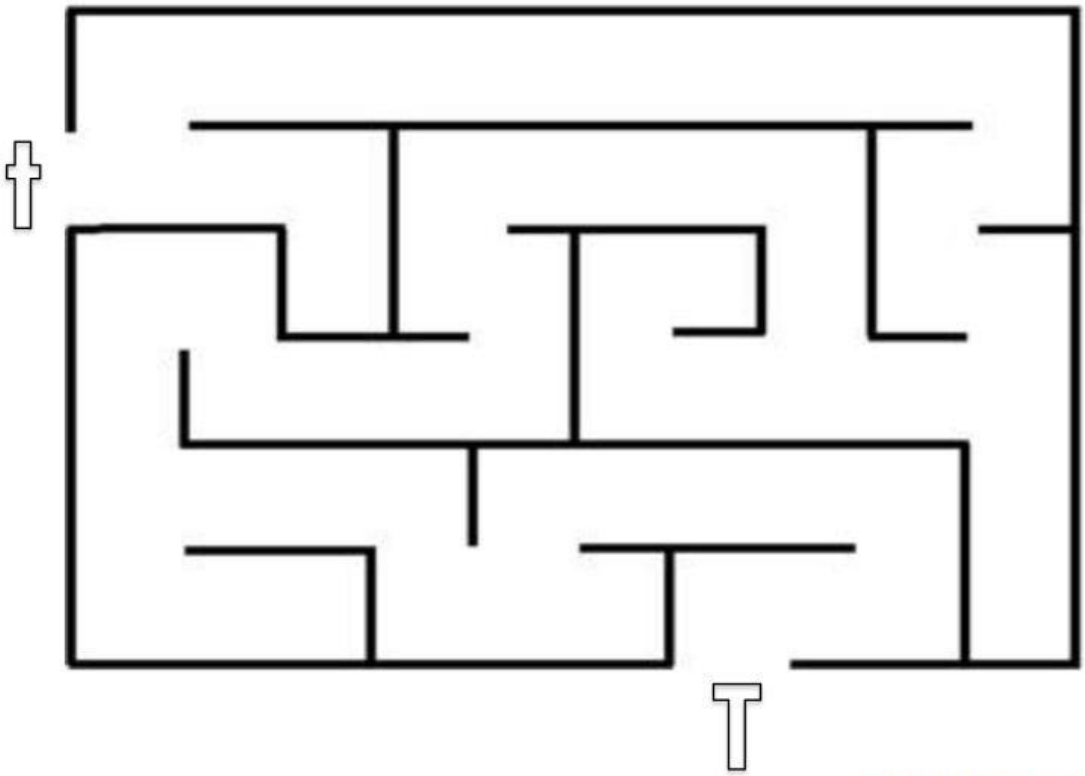

LIVEWORKSHEETS

National Teachers College
629 J. Nepomuceno Street, Quiapo, Manila

C. Color the pictures that begin with the letter **'Tt'**.

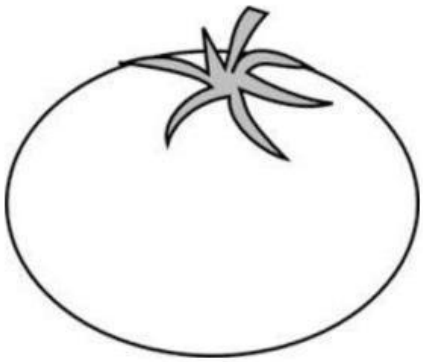

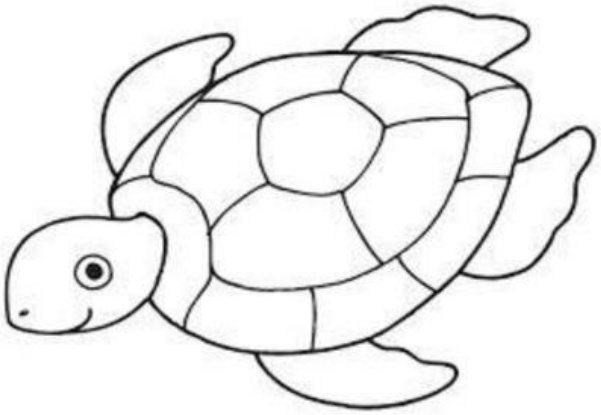

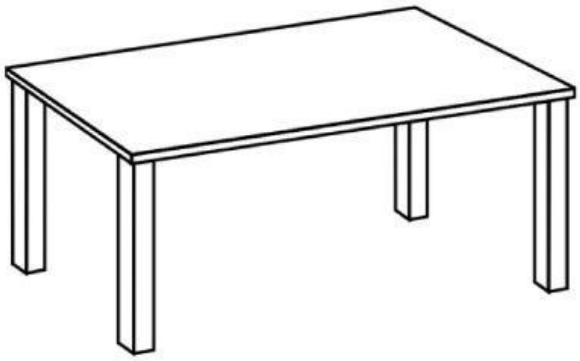

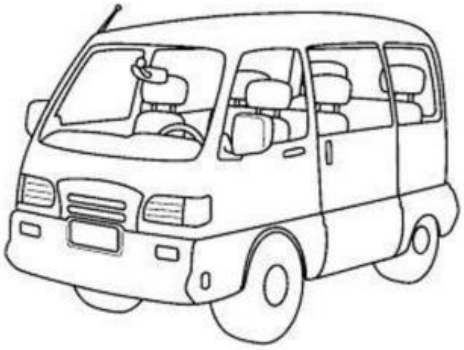

LIVEWORKSHEETS