Round all answers to the nearest hundredth

Volume of a Cylinder

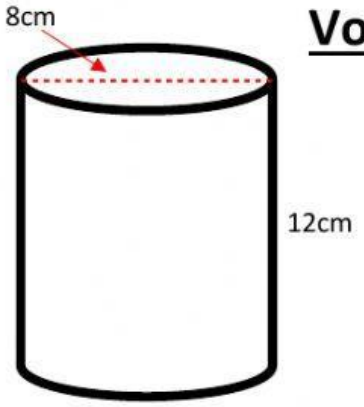

Volume: _____ cm^2

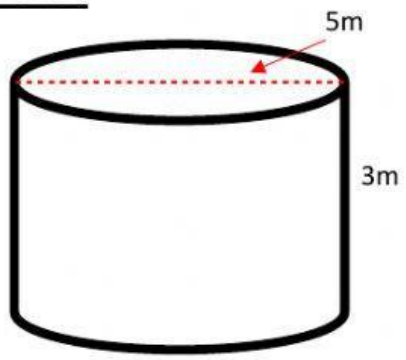

Volume: _____ m^2

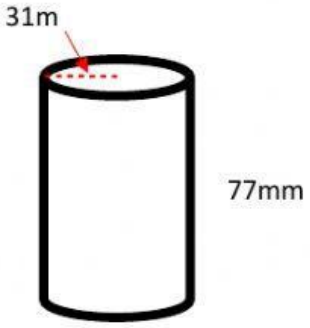

Volume: _____ mm^2

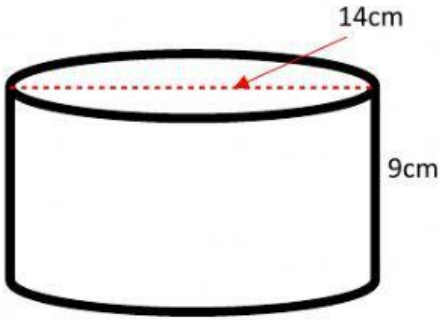

Volume: _____ cm^2

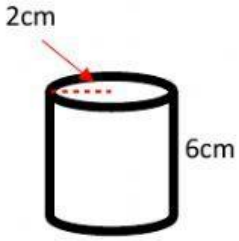

Volume: _____ cm^2

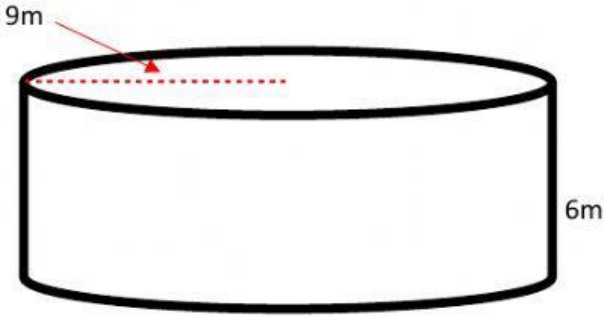

Volume: _____ m^2

LIVEWORKSHEETS