Mari mengira.

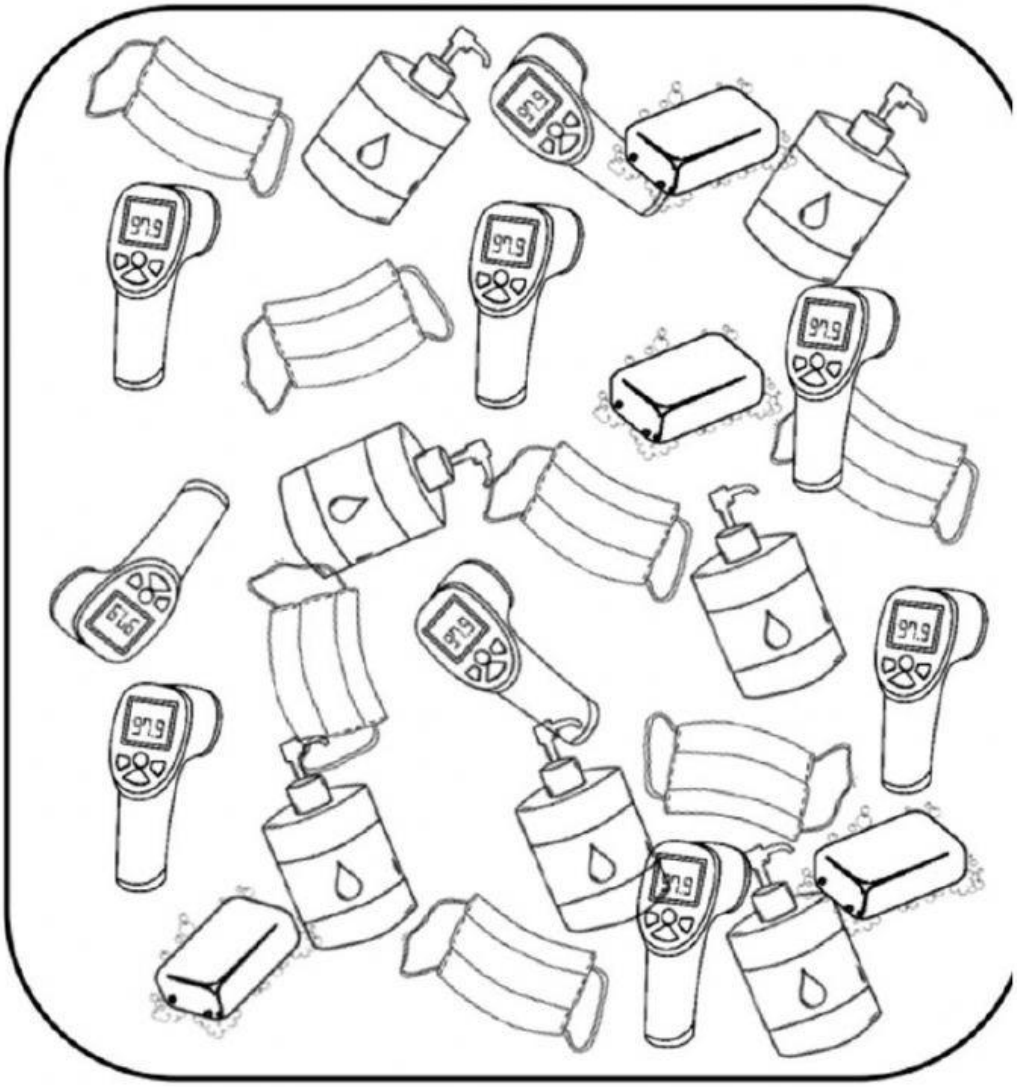

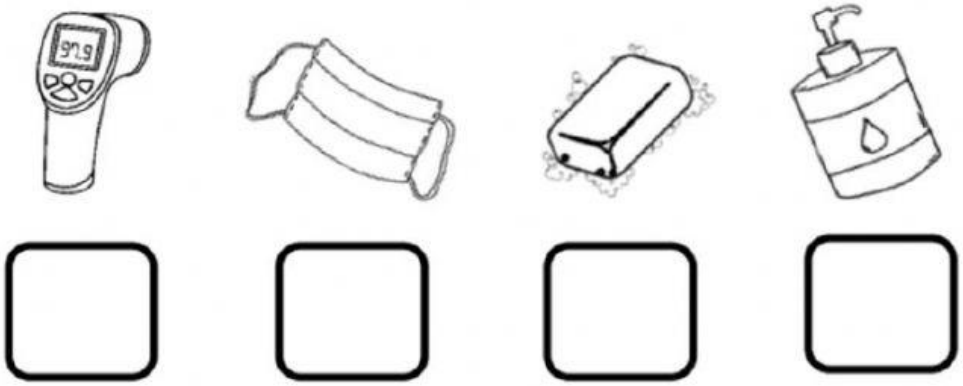

LIVEWORKSHEETS

Mari kita mengira.

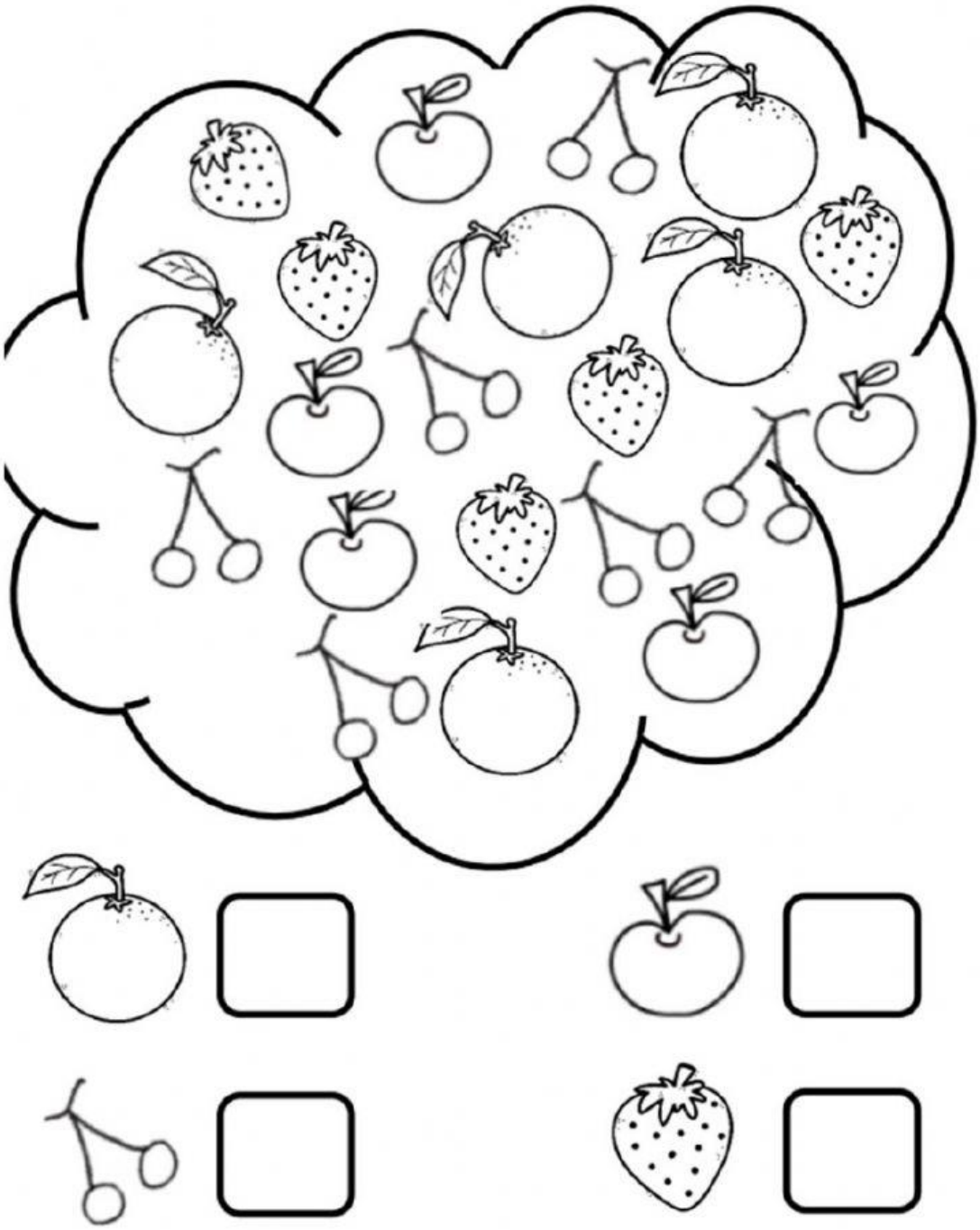

LIVEWORKSHEETS